NSM HWT F

Air-water chiller with free-cooling

Cooling capacity 306 ÷ 2001 kW

- **High efficiency also at partial loads**
- **Microchannel coils**
- **Suitable for Data Center applications**
- **Water produced up to 30 °C**
- **Night mode**

DESCRIPTION

Air-cooled outdoor chiller designed to meet air conditioning needs in residential/commercial complexes or industrial applications.
These are outdoor units with screw compressors, axial fans, micro-channel coils, and shell and tube heat exchangers
The base, the structure and the panels are made of galvanized steel treated with polyester paint RAL 9003.

These are flexible and reliable units which adapt to the most diverse load conditions thanks to the precise design and the use of steady speed compressors together with inverter-controlled variable speed compressors guaranteeing a high energy efficiency level both at full and partial load.

VERSIONS

A High efficiency
E Silenced high efficiency
N Silenced very high efficiency
U Very high efficiency

FEATURES

Operating field

Water produced from 5 °C ÷ 30 °C.

Unit with 2/3 cooling circuits

Unit with 2/3 refrigerant circuits designed to provide maximum efficiency at full load, ensuring high efficiency at partial loads also and ensuring continuity in case one of the circuits stops.

Condensation control temperature

Fitted as standard with a device for electronic condensation control so that the unit can work even with low temperatures, adapting the air flow rate to the actual system request in order to reduce consumption.

Aluminium microchannel coils

The whole range uses microchannel condenser coils allowing reduction of refrigerant charge but keeping the same high efficiency.

Free-cooling water coils

These units also have a water coil dedicated to free-cooling mode.
Free-cooling offers significant energy saving in applications that require cooling all year round.

As soon as the outside air temperature allows, a valve makes the water flow towards the free-cooling battery which is cooled directly by the air. The compressors are completely shut down, if possible, leading to considerable electrical savings.

■ *A "P" free-cooling plus model with the oversized water battery can be chosen for applications in which a higher free-cooling performance is required.*

Electronic expansion valve

The possibility to use electronic expansion valve, offers significant benefits, especially when the chiller is working with partial loads, increasing the energy efficiency of the unit.

Integrated hydronic kit

To obtain a solution that allows you to save money and to facilitate installation. These units can be configured with an integrated hydronic system.
The kit contains the main hydraulic components, and is available in various configurations with a single pump or a standby pump too, so the customer can choose the right useful head.

CONTROL

Microprocessor control, with keyboard and LCD display, for easy access on the unit with a menu available in several languages.

— The presence of a programmable timer allows functioning time periods and a possible second set-point to be set.
— The temperature control takes place with the integral proportional logic, based on the water output temperature.
— **Night Mode:** it is possible to set a silenced operation profile. Perfect for night operation since it guarantees greater acoustic comfort in the evenings, and a high efficiency in the time of greater load.

ACCESSORIES

AER485P1 x n° 2: RS-485 interface for supervising systems with MODBUS protocol. 1 accessory is provided for each unit control board.
AER485P1 x n° 3: RS-485 interface for supervising systems with MODBUS protocol. 1 accessory is provided for each unit control board.
AERBAC-ONE: Ethernet communication interface for Bacnet/IP and Modbus TCP/IP protocols, HTTPS protocol for web interface, encrypted commu-

nication protocols and access credential management in accordance with the latest standards. One accessory is provided for each unit control board.
AERBACP: Ethernet communication interface for Bacnet/IP and Modbus TCP/IP protocols. 1 accessory is provided for each unit control board.
AERNET: The device remotely controls, manages and remotely monitors a chiller/heat pump using a PC, smartphone or table via a Cloud connection. AERNET acts as Master while each connected unit is configured as Slave up to a maximum of 6 control cards. The connection is made via cable and/or USB key. Wi-Fi connectivity is not available. It is also possible to save a log file with all the data from the connected units to your terminal with a simple click for possible post-analysis. With the purchase of the Router, the Customer benefits from a 24-month free period during which he can use the Aernet Service at no additional cost. At the end of this initial period, the Service may be renewed by subscribing to a 1, 2 or 3 year subscription. For further details on costs and renewal methods, please contact our office or consult the technical documentation available on our website. www.aermec.com.

FB1: Air filter to protect the micro-channel coils. Formed of a frame and a composite baffle in micro-expanded aluminium mesh, with particularly low pressure drops.
MULTICHILLER-EVO: Control, switch-on and switch-off system of the single chillers where multiple units are installed in parallel (max. no. 9), always ensuring constant flow rate to the evaporators.
PRV3: Allows you to control the chiller at a distance.
AVX: Spring anti-vibration supports.

FACTORY FITTED ACCESSORIES

RIF: Power factor correction. Connected in parallel to the motor allowing about 10% reduction of input current.
GP_: Anti-intrusion grid kit
KRS: Electric heater for the heat exchanger
AK: Acoustic kit that lowers the noise level even further, thanks to the special coating on the panelling or on those components that produce the most noise in the unit. Available for the low noise version only.

ACCESSORIES COMPATIBILITY

Model	Ver	1402	1602	1802	2002	2202	2352	2502	2652	2802	3002	3202	3402	3602
AER485P1 x n° 2 (1)	A,E,N,U	•	•	•	•	•	•	•	•	•	•	•	•	•
AERBAC-ONE x no. 2	A,E,N,U	•	•	•	•	•	•	•	•	•	•	•	•	•
AERBACP x no. 2	A,E,N,U	•	•	•	•	•	•	•	•	•	•	•	•	•
AERNET	A,E,N,U	•	•	•	•	•	•	•	•	•	•	•	•	•
FB1	A,E,N,U	•	•	•	•	•	•	•	•	•	•	•	•	•
MULTICHILLER-EVO	A,E,N,U	•	•	•	•	•	•	•	•	•	•	•	•	•
PRV3	A,E,N,U	•	•	•	•	•	•	•	•	•	•	•	•	•

Model	Ver	3902	4202	4502	4802	5202	5602	6002	6402	6903	7203	8403	9603
AER485P1 x n° 2 (1)	A,E,N,U	•	•	•	•	•	•	•	•				
AER485P1 x n° 3 (1)	A,E,N,U									•	•	•	•
AERBAC-ONE x no. 2	A,E,N,U	•	•	•	•	•	•	•	•				
AERBAC-ONE x no. 3	A,E,N,U									•	•	•	•
AERBACP x no. 2	A,E,N,U	•	•	•	•	•	•	•	•				
AERBACP x no. 3	A,E,N,U									•	•	•	•
AERNET	A,E,N,U	•	•	•	•	•	•	•	•	•	•	•	•
FB1	A,E,N,U	•	•	•	•	•	•	•	•	•	•	•	•
MULTICHILLER-EVO	A,E,N,U	•	•	•	•	•	•	•	•	•	•	•	•
PRV3	A,E,N,U	•	•	•	•	•	•	•	•	•	•	•	•

(1) x Indicates the quantity of accessories to match.

Antivibration

Ver	1402	1602	1802	2002	2202	2352	2502	2652	2802	3002	3202	3402	3602
A, E, N, U	AVX. (1)	AVX. (1)	AVX. (1)	AVX. (1)	AVX. (1)	AVX. (1)	AVX. (1)	AVX. (1)	AVX. (1)	AVX. (1)	AVX. (1)	AVX. (1)	AVX. (1)

(1) Contact us.

Ver	3902	4202	4502	4802	5202	5602	6002	6402	6903	7203	8403	9603
A, E, N, U	AVX. (1)	AVX. (1)	AVX. (1)	AVX. (1)	AVX. (1)	AVX. (1)	AVX. (1)	AVX. (1)	AVX. (1)	AVX. (1)	AVX. (1)	AVX. (1)

(1) Contact us.

Anti-intrusion grid

Ver	1402	1602	1802	2002	2202	2352	2502	2652	2802	3002	3202	3402	3602
A, E, N, U	GP. (1)	GP. (1)	GP. (1)	GP. (1)	GP. (1)	GP. (1)	GP. (1)	GP. (1)	GP. (1)	GP. (1)	GP. (1)	GP. (1)	GP. (1)

(1) Contact the factory
A grey background indicates the accessory must be assembled in the factory

Ver	3902	4202	4502	4802	5202	5602	6002	6402	6903	7203	8403	9603
A, E, N, U	GP. (1)	GP. (1)	GP. (1)	GP. (1)	GP. (1)	GP. (1)	GP. (1)	GP. (1)	GP. (1)	GP. (1)	GP. (1)	GP. (1)

(1) Contact the factory
A grey background indicates the accessory must be assembled in the factory

Heater exchangers

Ver	1402	1602	1802	2002	2202	2352	2502	2652	2802	3002	3202	3402	3602
A, E, N, U	KRS (1)	KRS (1)	KRS (1)	KRS (1)	KRS (1)	KRS (1)	KRS (1)	KRS (1)	KRS (1)	KRS (1)	KRS (1)	KRS (1)	KRS (1)

(1) Contact the factory
A grey background indicates the accessory must be assembled in the factory

Ver	3902	4202	4502	4802	5202	5602	6002	6402	6903	7203	8403	9603
A, E, N, U	KRS (1)	KRS (1)	KRS (1)	KRS (1)	KRS (1)	KRS (1)	KRS (1)	KRS (1)	KRS (1)	KRS (1)	KRS (1)	KRS (1)

(1) Contact the factory
A grey background indicates the accessory must be assembled in the factory

Acoustic kit

Ver	1402	1602	1802	2002	2202	2352	2502	2652	2802	3002	3202	3402	3602
A, E, N, U	AK (1)	AK (1)	AK (1)	AK (1)	AK (1)	AK (1)	AK (1)	AK (1)	AK (1)	AK (1)	AK (1)	AK (1)	AK (1)

(1) Available only in low noise version
A grey background indicates the accessory must be assembled in the factory

Ver	3902	4202	4502	4802	5202	5602	6002	6402	6903	7203	8403	9603
A, E, N, U	AK (1)	AK (1)	AK (1)	AK (1)	AK (1)	AK (1)	AK (1)	AK (1)	AK (1)	AK (1)	AK (1)	AK (1)

(1) Available only in low noise version
A grey background indicates the accessory must be assembled in the factory

Power factor correction

Ver	1402	1602	1802	2002	2202	2352	2502	2652	2802
A	RIFNSM1402Q	RIFNSM1602Q	RIFNSM1802Q	RIFNSM2002Q	RIFNSM2202Q	RIFNSM2352Q	RIFNSM2502Q	RIFNSM2652Q	RIFNSM2802C
E	RIFNSM1402Q	RIFNSM1602Q	RIFNSM1802Q	RIFNSM2002Q	RIFNSM2202Q	RIFNSM2352C	RIFNSM2502C	RIFNSM2652Q	RIFNSM2802C
N	RIFNSM1402Q	RIFNSM1602Q	RIFNSM1802C	RIFNSM2002Q	RIFNSM2202C	RIFNSM2352C	RIFNSM2502C	RIFNSM2652Q	RIFNSM2802C
U	RIFNSM1402Q	RIFNSM1602Q	RIFNSM1802Q	RIFNSM2002C	RIFNSM2202Q	RIFNSM2352C	RIFNSM2502C	RIFNSM2652Q	RIFNSM2802C

A grey background indicates the accessory must be assembled in the factory

Ver	3002	3202	3402	3602	3902	4202	4502	4802	5202
A, E, U	RIFNSM3002C	RIFNSM3202C	RIFNSM3402C	RIFNSM3602C	RIFNSM3902C	RIFNSM4202C	RIFNSM4502C	RIFNSM4802C	RIFNSM5202C
N	RIFNSM3002C	RIFNSM3202C	RIFNSM3402C	RIFNSM3602C	RIFNSM3902C	RIFNSM4202C	-	-	-

The accessory cannot be fitted on the configurations indicated with -
A grey background indicates the accessory must be assembled in the factory

Ver	5602	6002	6402	6503	6703	6903	7203	8403	9603
A	RIFNSM5602C	RIFNSM6002C	RIFNSM6402C	-	-	-	-	-	-

The accessory cannot be fitted on the configurations indicated with -
A grey background indicates the accessory must be assembled in the factory

CONFIGURATOR

Field		Description
1,2,3		**NSM**
4,5,6,7		**Size** 1402, 1602, 1802, 2002, 2202, 2352, 2502, 2652, 2802, 3002, 3202, 3402, 3602, 3902, 4202, 4502, 4802, 5202, 5602, 6002, 6402, 6903, 7203, 8403, 9603
8		**Operating field (1)**
	W	Electronic thermostatic expansion valve
9		**Model**
	F	Free-cooling
	P	Free-cooling plus (2)
10		**Heat recovery**
	°	Without heat recovery
11		**Version**
	A	High efficiency
	E	Silenced high efficiency
	N	Silenced very high efficiency
	U	Very high efficiency
12		**Coils / free-cooling coils**
	O	Painted alluminium microchannel / Copper painted aluminium
	R	Copper-copper/Copper-copper (2)
	V	Copper-painted alumimium / Copper-painted alumimium (2)
	°	Alluminium microchannel / Copper - aluminium
13		**Fans**
	J	Inverter
14		**Power supply**
	°	400V ~ 3 50Hz
15,16		**Integrated hydronic kit**
		Without hydronic kit
	00	Without hydronic kit
		Kit with n° 1 pump

Field		Description
	PA	Pump A
	PB	Pump B
	PC	Pump C
	PD	Pump D
	PE	Pump E
	PF	Pump F
	PG	Pump G
	PH	Pump H
	PI	Pump I
	PJ	Pump J (3)
		Pump n° 1 pump + stand-by pump
	DA	Pump A + stand-by pump
	DB	Pump B + stand-by pump
	DC	Pump C + stand-by pump
	DD	Pump D + stand-by pump
	DE	Pump E + stand-by pump
	DF	Pump F + stand-by pump
	DG	Pump G + stand-by pump
	DH	Pump H + stand-by pump
	DI	Pump I + stand-by pump
	DJ	Pump J + stand-by pump (3)
		Kit with 2 pumps
	TF	Double pump F
	TG	Double pump G
	TH	Double pump H
	TI	Double pump I
	TJ	Double pump J (3)

(1) Water produced from 5 °C ÷ 30 °C
(2) The Free-Cooling Plus "P" models are only compatible with"°" ed "O"
(3) For all configurations including pump J please contact the factory.

PERFORMANCE SPECIFICATIONS

NSM HWT FA-PA

Size		1402	1602	1802	2002	2202	2352	2502	2652	2802	3002	3202	3402	3602
Model: F														
Cooling performance chiller operation														
Cooling capacity	kW	306,0	351,0	400,0	441,0	479,0	505,0	546,0	589,0	638,0	653,0	687,0	753,0	792,0
Input power	kW	82,0	95,0	109,0	118,0	125,0	135,0	147,0	155,0	167,0	172,0	179,0	192,0	205,0
Cooling total input current	A	146,00	166,00	187,00	200,00	208,00	224,00	242,00	258,00	277,00	290,00	306,00	327,00	348,00
EER	W/W	3,75	3,69	3,69	3,73	3,83	3,73	3,71	3,79	3,81	3,80	3,84	3,92	3,86
Water flow rate system side	l/h	52.650	60.360	68.820	75.940	82.440	86.790	93.850	101.330	109.680	112.330	118.100	129.500	136.230
Pressure drop system side	kPa	60	80	95	76	89	99	116	85	91	96	84	93	103
Cooling performances with free-cooling														
Cooling capacity	kW	336,0	351,0	363,0	370,0	449,0	454,0	462,0	542,0	551,0	554,0	559,0	644,0	651,0
Input power	kW	19,3	19,3	19,3	19,3	24,1	24,1	24,1	28,9	28,9	28,9	28,9	33,7	33,7
Free cooling total input current	A	30,0	30,0	30,0	30,0	37,6	37,6	37,6	45,1	45,1	45,1	45,1	52,6	52,6
EER	W/W	17,43	18,20	18,82	19,20	18,63	18,86	19,16	18,74	19,06	19,15	19,32	19,11	19,29
Water flow rate system side	l/h	52.650	60.360	68.820	75.940	82.440	86.790	93.850	101.330	109.680	112.330	118.100	129.500	136.230
Pressure drop system side	kPa	87	115	139	129	133	147	171	128	141	147	141	146	161

Size		1402	1602	1802	2002	2202	2352	2502	2652	2802	3002	3202	3402	3602
Model: P														
Cooling performance chiller operation														
Cooling capacity	kW	305,0	349,0	398,0	439,0	477,0	502,0	543,0	587,0	635,0	650,0	683,0	749,0	788,0
Input power	kW	82,0	96,0	109,0	120,0	126,0	136,0	148,0	157,0	169,0	174,0	181,0	194,0	207,0
Cooling total input current	A	147,00	167,00	188,00	201,00	210,00	226,00	244,00	260,00	279,00	292,00	308,00	330,00	351,00
EER	W/W	3,70	3,64	3,64	3,68	3,78	3,68	3,66	3,74	3,76	3,74	3,78	3,86	3,80
Water flow rate system side	l/h	52.410	60.090	68.480	75.580	82.100	86.410	93.420	100.950	109.190	111.820	117.510	128.910	135.580
Pressure drop system side	kPa	59	79	94	75	89	98	115	84	90	95	83	92	102
Cooling performances with free-cooling														
Cooling capacity	kW	361,0	378,0	391,0	399,0	484,0	490,0	497,0	584,0	594,0	597,0	602,0	694,0	701,0
Input power	kW	19,7	19,7	19,7	19,7	24,6	24,6	24,6	29,5	29,5	29,5	29,5	34,4	34,4
Free cooling total input current	A	30,6	30,6	30,6	30,6	38,2	38,2	38,2	45,9	45,9	45,9	45,9	53,5	53,5
EER	W/W	18,35	19,22	19,89	20,29	19,69	19,93	20,25	19,81	20,15	20,24	20,41	20,19	20,38
Water flow rate system side	l/h	52.410	60.090	68.480	75.580	82.100	86.410	93.420	100.950	109.190	111.820	117.510	128.910	135.580
Pressure drop system side	kPa	86	114	138	128	131	145	169	127	139	146	139	145	160

NSM HWT FA-PA

Size		3902	4202	4502	4802	5202	5602	6002	6402	6903	7203	8403	9603
Model: F													
Cooling performance chiller operation													
Cooling capacity	kW	853,0	882,0	959,0	1014,0	1082,0	1169,0	1262,0	1327,0	1476,0	1531,0	1758,0	2001,0
Input power	kW	216,0	228,0	244,0	260,0	281,0	295,0	319,0	343,0	373,0	388,0	442,0	512,0
Cooling total input current	A	362,00	377,00	416,00	453,00	478,00	494,00	531,00	567,00	646,00	683,00	740,00	854,00
EER	W/W	3,95	3,87	3,92	3,90	3,86	3,97	3,95	3,87	3,96	3,94	3,97	3,91
Water flow rate system side	l/h	146.650	151.620	165.010	174.350	186.190	201.150	217.040	228.220	253.930	263.260	302.310	344.170
Pressure drop system side	kPa	69	74	91	101	94	110	130	144	116	116	117	138
Cooling performances with free-cooling													
Cooling capacity	kW	735,0	740,0	827,0	836,0	845,0	935,0	1025,0	1033,0	1284,0	1293,0	1402,0	1590,0
Input power	kW	38,5	38,5	43,4	43,4	43,4	48,2	53,0	53,0	67,5	67,5	72,3	81,9
Free cooling total input current	A	60,1	60,1	67,6	67,6	67,6	75,1	82,6	82,6	105,1	105,1	112,7	127,7
EER	W/W	19,07	19,19	19,07	19,27	19,48	19,39	19,33	19,49	19,03	19,17	19,40	19,42
Water flow rate system side	l/h	146.650	151.620	165.010	174.350	186.190	201.150	217.040	228.220	253.930	263.260	302.310	344.170
Pressure drop system side	kPa	119	127	142	158	159	173	194	213	165	165	179	207

Size		3902	4202	4502	4802	5202	5602	6002	6402	6903	7203	8403	9603
Model: P													
Cooling performance chiller operation													
Cooling capacity	kW	849,0	878,0	955,0	1009,0	1077,0	1164,0	1256,0	1320,0	1470,0	1524,0	1749,0	1991,0
Input power	kW	218,0	230,0	247,0	262,0	284,0	298,0	322,0	346,0	377,0	392,0	447,0	517,0
Cooling total input current	A	365,00	381,00	420,00	456,00	482,00	498,00	536,00	571,00	652,00	688,00	747,00	861,00
EER	W/W	3,90	3,81	3,87	3,84	3,80	3,91	3,90	3,81	3,90	3,89	3,91	3,85
Water flow rate system side	l/h	146.000	150.930	164.290	173.550	185.230	200.120	215.990	227.050	252.860	262.120	300.800	342.450
Pressure drop system side	kPa	69	73	90	100	93	109	129	142	115	115	115	136
Cooling performances with free-cooling													
Cooling capacity	kW	792,0	797,0	891,0	900,0	910,0	1007,0	1104,0	1113,0	1384,0	1393,0	1510,0	1713,0
Input power	kW	39,3	39,3	44,2	44,2	44,2	49,1	54,0	54,0	68,8	68,8	73,7	83,5
Free cooling total input current	A	61,2	61,2	68,8	68,8	68,8	76,5	84,1	84,1	107,0	107,0	114,7	130,0
EER	W/W	20,16	20,28	20,16	20,36	20,58	20,49	20,42	20,59	20,12	20,25	20,49	20,51
Water flow rate system side	l/h	146.000	150.930	164.290	173.550	185.230	200.120	215.990	227.050	252.860	262.120	300.800	342.450
Pressure drop system side	kPa	118	126	141	156	157	172	192	211	164	164	178	205

Cooling performance chiller operation: System side water heat exchanger 25 °C/20 °C; External air 35 °C; Chiller operation 100%; Free-cooling 0%

Cooling performances with free-cooling: System side water heat exchanger 25 °C; External air 12°C

NSM HWT FE-PE

Size		1402	1602	1802	2002	2202	2352	2502	2652	2802	3002	3202	3402	3602
Model: F														
Cooling performance chiller operation														
Cooling capacity	kW	315,0	362,0	415,0	456,0	478,0	524,0	551,0	599,0	626,0	641,0	667,0	735,0	772,0
Input power	kW	75,0	91,0	101,0	112,0	120,0	127,0	138,0	145,0	156,0	161,0	169,0	178,0	192,0
Cooling total input current	A	134,00	158,00	175,00	189,00	199,00	210,00	227,00	240,00	258,00	272,00	288,00	303,00	325,00
EER	W/W	4,19	3,97	4,09	4,07	3,98	4,13	4,00	4,12	4,02	3,97	3,95	4,13	4,03
Water flow rate system side	l/h	54.220	62.220	71.300	78.430	82.240	90.170	94.830	102.950	107.680	110.230	114.670	126.390	132.800
Pressure drop system side	kPa	42	49	64	76	85	61	66	68	74	79	80	51	58
Cooling performances with free-cooling														
Cooling capacity	kW	267,0	273,0	337,0	342,0	344,0	408,0	411,0	474,0	478,0	479,0	482,0	548,0	551,0
Input power	kW	6,4	6,4	7,9	7,9	7,9	9,5	9,5	11,1	11,1	11,1	11,1	12,7	12,7
Free cooling total input current	A	9,4	9,4	11,8	11,8	11,8	14,1	14,1	16,5	16,5	16,5	16,5	18,8	18,8
EER	W/W	41,99	43,01	42,41	43,05	43,31	42,79	43,10	42,64	42,94	43,08	43,29	43,10	43,35
Water flow rate system side	l/h	54.220	62.220	71.300	78.430	82.240	90.170	94.830	102.950	107.680	110.230	114.670	126.390	132.800
Pressure drop system side	kPa	71	86	97	115	127	95	104	102	112	118	122	89	99

Size		1402	1602	1802	2002	2202	2352	2502	2652	2802	3002	3202	3402	3602
Model: P														
Cooling performance chiller operation														
Cooling capacity	kW	314,0	360,0	412,0	453,0	474,0	521,0	548,0	595,0	622,0	637,0	662,0	730,0	767,0
Input power	kW	76,0	92,0	102,0	113,0	122,0	128,0	139,0	147,0	157,0	163,0	170,0	180,0	194,0
Cooling total input current	A	134,00	159,00	176,00	190,00	201,00	211,00	229,00	242,00	260,00	274,00	291,00	306,00	328,00
EER	W/W	4,14	3,92	4,03	4,00	3,90	4,07	3,93	4,06	3,96	3,90	3,88	4,06	3,95
Water flow rate system side	l/h	53.990	61.890	70.890	77.860	81.600	89.640	94.230	102.360	107.020	109.540	113.890	125.570	131.860
Pressure drop system side	kPa	42	49	63	75	83	60	65	67	73	78	79	51	57
Cooling performances with free-cooling														
Cooling capacity	kW	285,0	292,0	360,0	365,0	367,0	435,0	438,0	506,0	509,0	511,0	513,0	584,0	587,0
Input power	kW	6,5	6,5	8,1	8,1	8,1	9,7	9,7	11,3	11,3	11,3	11,3	12,9	12,9
Free cooling total input current	A	9,6	9,6	11,9	11,9	11,9	14,3	14,3	16,7	16,7	16,7	16,7	19,1	19,1
EER	W/W	44,05	45,10	44,49	45,14	45,38	44,88	45,19	44,73	45,03	45,17	45,36	45,18	45,42
Water flow rate system side	l/h	53.990	61.890	70.890	77.860	81.600	89.640	94.230	102.360	107.020	109.540	113.890	125.570	131.860
Pressure drop system side	kPa	70	86	96	113	125	94	102	101	110	116	120	88	98

NSM HWT FE-PE

Size		3902	4202	4502	4802	5202	5602	6002	6402	6903	7203	8403	9603
Model: F													
Cooling performance chiller operation													
Cooling capacity	kW	823,0	870,0	932,0	1011,0	1070,0	1152,0	1226,0	1300,0	1423,0	1502,0	-	-
Input power	kW	202,0	210,0	228,0	241,0	260,0	275,0	296,0	318,0	350,0	364,0	-	-
Cooling total input current	A	339,00	348,00	388,00	421,00	443,00	460,00	493,00	526,00	601,00	631,00	-	-
EER	W/W	4,07	4,15	4,09	4,19	4,12	4,19	4,14	4,09	4,07	4,13	-	-
Water flow rate system side	l/h	141.610	149.590	160.240	173.870	184.060	198.120	210.870	223.620	244.770	258.380	-	-
Pressure drop system side	kPa	69	78	91	86	94	65	81	81	105	105	-	-
Cooling performances with free-cooling													
Cooling capacity	kW	616,0	680,0	686,0	753,0	759,0	826,0	893,0	960,0	1031,0	1099,0	-	-
Input power	kW	14,3	15,9	15,9	17,5	17,5	19,1	20,7	22,3	23,8	25,4	-	-
Free cooling total input current	A	21,2	23,5	23,5	25,9	25,9	28,2	30,6	32,9	35,3	37,6	-	-
EER	W/W	43,07	42,76	43,17	43,10	43,39	43,32	43,24	43,16	43,27	43,21	-	-
Water flow rate system side	l/h	141.610	149.590	160.240	173.870	184.060	198.120	210.870	223.620	244.770	258.380	-	-
Pressure drop system side	kPa	107	114	133	128	140	106	121	121	150	150	-	-

Size		3902	4202	4502	4802	5202	5602	6002	6402	6903	7203	8403	9603
Model: P													
Cooling performance chiller operation													
Cooling capacity	kW	818,0	865,0	926,0	1005,0	1063,0	1144,0	1218,0	1292,0	1414,0	1493,0	-	-
Input power	kW	204,0	212,0	230,0	244,0	263,0	278,0	300,0	321,0	354,0	368,0	-	-
Cooling total input current	A	342,00	351,00	392,00	425,00	448,00	464,00	497,00	531,00	607,00	636,00	-	-
EER	W/W	4,00	4,08	4,02	4,12	4,04	4,12	4,07	4,02	3,99	4,06	-	-
Water flow rate system side	l/h	140.680	148.750	159.230	172.870	182.790	196.750	209.470	222.190	243.180	256.800	-	-
Pressure drop system side	kPa	68	77	90	85	93	64	80	80	104	104	-	-
Cooling performances with free-cooling													
Cooling capacity	kW	657,0	725,0	732,0	803,0	808,0	880,0	952,0	1024,0	1099,0	1171,0	-	-
Input power	kW	14,5	16,2	16,2	17,8	17,8	19,4	21,0	22,6	24,2	25,9	-	-
Free cooling total input current	A	21,5	23,9	23,9	26,3	26,3	28,7	31,0	33,4	35,8	38,2	-	-
EER	W/W	45,16	44,85	45,26	45,19	45,45	45,40	45,32	45,24	45,35	45,30	-	-
Water flow rate system side	l/h	140.680	148.750	159.230	172.870	182.790	196.750	209.470	222.190	243.180	256.800	-	-
Pressure drop system side	kPa	106	113	131	127	139	104	119	120	148	149	-	-

Cooling performance chiller operation: System side water heat exchanger 25 °C/20 °C; External air 35 °C; Chiller operation 100%; Free-cooling 0%

Cooling performances with free-cooling: System side water heat exchanger 25 °C; External air 12°C

NSM HWT FU-PU

Size		1402	1602	1802	2002	2202	2352	2502	2652	2802	3002	3202	3402	3602
Model: F														
Cooling performance chiller operation														
Cooling capacity	kW	328,0	381,0	435,0	482,0	506,0	550,0	580,0	627,0	657,0	674,0	703,0	772,0	814,0
Input power	kW	84,0	98,0	112,0	121,0	128,0	138,0	148,0	159,0	168,0	172,0	178,0	191,0	203,0
Cooling total input current	A	148,00	170,00	192,00	204,00	212,00	229,00	244,00	263,00	279,00	291,00	305,00	326,00	345,00
EER	W/W	3,93	3,90	3,89	3,99	3,97	3,99	3,92	3,94	3,91	3,91	3,95	4,05	4,02
Water flow rate system side	l/h	56.440	65.570	74.810	82.890	87.080	94.670	99.780	107.790	113.080	115.880	120.880	132.770	139.960
Pressure drop system side	kPa	46	54	71	84	94	66	72	74	81	86	87	56	64
Cooling performances with free-cooling														
Cooling capacity	kW	344,0	359,0	437,0	450,0	455,0	533,0	540,0	617,0	625,0	629,0	635,0	719,0	728,0
Input power	kW	19,3	19,3	24,1	24,1	24,1	28,9	28,9	33,7	33,7	33,7	33,7	38,5	38,5
Free cooling total input current	A	30,0	30,0	37,6	37,6	37,6	45,1	45,1	52,6	52,6	52,6	52,6	60,1	60,1
EER	W/W	17,84	18,61	18,16	18,66	18,87	18,43	18,67	18,31	18,54	18,65	18,84	18,66	18,89
Water flow rate system side	l/h	56.440	65.570	74.810	82.890	87.080	94.670	99.780	107.790	113.080	115.880	120.880	132.770	139.960
Pressure drop system side	kPa	77	95	107	127	142	104	114	111	122	129	134	97	109

Size		1402	1602	1802	2002	2202	2352	2502	2652	2802	3002	3202	3402	3602
Model: P														
Cooling performance chiller operation														
Cooling capacity	kW	327,0	380,0	433,0	480,0	504,0	548,0	578,0	624,0	655,0	671,0	700,0	769,0	810,0
Input power	kW	84,0	99,0	113,0	122,0	129,0	139,0	149,0	160,0	170,0	174,0	180,0	192,0	205,0
Cooling total input current	A	-	-	-	-	-	-	-	-	-	-	-	-	-
EER	W/W	3,88	3,84	3,84	3,93	3,91	3,94	3,87	3,89	3,86	3,86	3,89	4,00	3,96
Water flow rate system side	l/h	56.250	65.300	74.510	82.510	86.670	94.290	99.370	107.380	112.630	115.420	120.380	132.250	139.380
Pressure drop system side	kPa	46	54	70	83	93	66	72	73	80	85	86	55	63
Cooling performances with free-cooling														
Cooling capacity	kW	370,0	386,0	471,0	484,0	490,0	574,0	582,0	665,0	674,0	678,0	685,0	775,0	785,0
Input power	kW	19,7	19,7	24,6	24,6	24,6	29,5	29,5	34,4	34,4	34,4	34,4	39,3	39,3
Free cooling total input current	A	-	-	-	-	-	-	-	-	-	-	-	-	-
EER	W/W	18,82	19,66	19,17	19,72	19,94	19,47	19,73	19,34	19,59	19,71	19,91	19,72	19,97
Water flow rate system side	l/h	56.250	65.300	74.510	82.510	86.670	94.290	99.370	107.380	112.630	115.420	120.380	132.250	139.380
Pressure drop system side	kPa	77	94	106	126	140	103	113	111	121	128	133	96	108

NSM HWT FU-PU

Size		3902	4202	4502	4802	5202	5602	6002	6402	6903	7203	8403	9603
Model: F													
Cooling performance chiller operation													
Cooling capacity	kW	864,0	909,0	978,0	1059,0	1127,0	1213,0	1289,0	1365,0	1495,0	1576,0	-	-
Input power	kW	216,0	228,0	243,0	260,0	276,0	293,0	317,0	341,0	372,0	388,0	-	-
Cooling total input current	A	363,00	378,00	414,00	454,00	472,00	493,00	529,00	566,00	639,00	677,00	-	-
EER	W/W	3,99	3,99	4,02	4,08	4,09	4,14	4,06	4,00	4,02	4,06	-	-
Water flow rate system side	l/h	148.610	156.340	168.140	182.140	193.790	208.610	221.670	234.730	257.070	271.060	-	-
Pressure drop system side	kPa	75	84	99	94	103	71	88	88	116	116	-	-
Cooling performances with free-cooling													
Cooling capacity	kW	808,0	886,0	902,0	989,0	1003,0	1091,0	1177,0	1262,0	1359,0	1446,0	-	-
Input power	kW	43,4	48,2	48,2	53,0	53,0	57,8	62,6	67,5	72,3	77,1	-	-
Free cooling total input current	A	67,6	75,1	75,1	82,6	82,6	90,1	97,6	105,1	112,7	120,2	-	-
EER	W/W	18,64	18,38	18,72	18,65	18,92	18,86	18,78	18,71	18,80	18,75	-	-
Water flow rate system side	l/h	148.610	156.340	168.140	182.140	193.790	208.610	221.670	234.730	257.070	271.060	-	-
Pressure drop system side	kPa	117	124	145	140	154	116	132	132	166	165	-	-

Size		3902	4202	4502	4802	5202	5602	6002	6402	6903	7203	8403	9603
Model: P													
Cooling performance chiller operation													
Cooling capacity	kW	861,0	906,0	974,0	1055,0	1122,0	1208,0	1284,0	1359,0	1489,0	1570,0	-	-
Input power	kW	218,0	230,0	245,0	262,0	278,0	296,0	320,0	344,0	375,0	392,0	-	-
Cooling total input current	A	366,00	381,00	418,00	457,00	475,00	497,00	533,00	570,00	644,00	682,00	-	-
EER	W/W	3,94	3,94	3,97	4,03	4,03	4,08	4,01	3,95	3,97	4,01	-	-
Water flow rate system side	l/h	148.030	155.780	167.500	181.460	193.010	207.750	220.780	233.810	256.070	270.020	-	-
Pressure drop system side	kPa	75	84	99	93	102	70	87	87	115	115	-	-
Cooling performances with free-cooling													
Cooling capacity	kW	871,0	954,0	972,0	1066,0	1081,0	1176,0	1268,0	1360,0	1465,0	1558,0	-	-
Input power	kW	44,2	49,1	49,1	54,0	54,0	59,0	63,9	68,8	73,7	78,6	-	-
Free cooling total input current	A	68,8	76,5	76,5	84,1	84,1	91,8	99,4	107,0	114,7	122,3	-	-
EER	W/W	19,70	19,42	19,79	19,71	20,00	19,94	19,85	19,77	19,88	19,82	-	-
Water flow rate system side	l/h	148.030	155.780	167.500	181.460	193.010	207.750	220.780	233.810	256.070	270.020	-	-
Pressure drop system side	kPa	117	123	144	139	153	115	131	131	164	164	-	-

Cooling performance chiller operation: System side water heat exchanger 25 °C/20 °C; External air 35 °C; Chiller operation 100%; Free-cooling 0%

Cooling performances with free-cooling: System side water heat exchanger 25 °C; External air 12°C

NSM HWT FN-PN

Size		1402	1602	1802	2002	2202	2352	2502	2652	2802	3002	3202	3402	3602
Model: F														
Cooling performance chiller operation														
Cooling capacity	kW	324,0	376,0	428,0	473,0	497,0	538,0	567,0	614,0	643,0	659,0	687,0	751,0	803,0
Input power	kW	74,0	88,0	99,0	109,0	116,0	124,0	134,0	142,0	152,0	157,0	163,0	174,0	184,0
Cooling total input current	A	132,00	154,00	172,00	184,00	192,00	206,00	222,00	235,00	252,00	265,00	280,00	297,00	313,00
EER	W/W	4,41	4,27	4,31	4,35	4,29	4,33	4,21	4,32	4,24	4,21	4,22	4,32	4,38
Water flow rate system side	l/h	55.800	64.730	73.570	81.410	85.540	92.510	97.450	105.570	110.670	113.400	118.220	129.100	138.190
Pressure drop system side	kPa	46	54	42	49	56	65	71	45	49	53	51	54	64
Cooling performances with free-cooling														
Cooling capacity	kW	318,0	330,0	391,0	401,0	404,0	465,0	470,0	531,0	536,0	539,0	543,0	607,0	670,0
Input power	kW	7,9	7,9	9,5	9,5	9,5	11,1	11,1	12,7	12,7	12,7	12,7	14,3	15,9
Free cooling total input current	A	12,0	12,0	14,0	14,0	14,0	16,0	16,0	19,0	19,0	19,0	19,0	21,0	24,0
EER	W/W	39,96	41,57	41,02	42,00	42,41	41,76	42,22	41,75	42,17	42,36	42,67	42,46	42,16
Water flow rate system side	l/h	55.800	64.730	73.570	81.410	85.540	92.510	97.450	105.570	110.670	113.400	118.220	129.100	138.190
Pressure drop system side	kPa	67	81	66	78	87	93	102	72	79	84	84	87	95

Size		1402	1602	1802	2002	2202	2352	2502	2652	2802	3002	3202	3402	3602
Model: P														
Cooling performance chiller operation														
Cooling capacity	kW	323,0	374,0	426,0	471,0	494,0	535,0	564,0	611,0	640,0	656,0	683,0	746,0	799,0
Input power	kW	74,0	89,0	100,0	110,0	117,0	125,0	136,0	143,0	153,0	158,0	164,0	175,0	185,0
Cooling total input current	A	132,00	155,00	173,00	185,00	194,00	207,00	224,00	237,00	254,00	267,00	282,00	300,00	316,00
EER	W/W	4,36	4,22	4,26	4,29	4,23	4,27	4,15	4,26	4,18	4,15	4,16	4,26	4,32
Water flow rate system side	l/h	55.590	64.410	73.210	80.970	85.050	92.040	96.930	105.040	110.080	112.780	117.540	128.400	137.510
Pressure drop system side	kPa	45	53	42	49	55	64	70	44	49	52	50	54	63
Cooling performances with free-cooling														
Cooling capacity	kW	337,0	352,0	417,0	427,0	431,0	495,0	501,0	566,0	572,0	575,0	579,0	648,0	715,0
Input power	kW	8,1	8,1	9,7	9,7	9,7	11,3	11,3	12,9	12,9	12,9	12,9	14,5	16,2
Free cooling total input current	A	12,0	12,0	14,0	14,0	14,0	17,0	17,0	19,0	19,0	19,0	19,0	21,0	24,0
EER	W/W	41,76	43,58	42,96	44,05	44,49	43,79	44,29	43,78	44,23	44,44	44,76	44,54	44,22
Water flow rate system side	l/h	55.590	64.410	73.210	80.970	85.050	92.040	96.930	105.040	110.080	112.780	117.540	128.400	137.510
Pressure drop system side	kPa	66	80	65	77	86	92	101	71	78	83	83	86	94

NSM HWT FN-PN

Size		3902	4202	4502	4802	5202	5602	6002	6402	6903	7203	8403	9603
Model: F													
Cooling performance chiller operation													
Cooling capacity	kW	852,0	881,0	969,0	1033,0	1115,0	1198,0	1263,0	1329,0	-	-	-	-
Input power	kW	195,0	207,0	218,0	232,0	249,0	265,0	288,0	311,0	-	-	-	-
Cooling total input current	A	328,00	343,00	374,00	408,00	427,00	447,00	481,00	516,00	-	-	-	-
EER	W/W	4,37	4,26	4,44	4,46	4,49	4,51	4,38	4,27	-	-	-	-
Water flow rate system side	l/h	146.560	151.590	166.730	177.640	191.820	206.010	217.280	228.590	-	-	-	-
Pressure drop system side	kPa	75	81	80	80	80	45	53	53	-	-	-	-
Cooling performances with free-cooling													
Cooling capacity	kW	731,0	737,0	857,0	921,0	988,0	1056,0	1068,0	1079,0	-	-	-	-
Input power	kW	17,5	17,5	20,7	22,3	23,8	25,4	25,4	25,4	-	-	-	-
Free cooling total input current	A	26,0	26,0	31,0	33,0	35,0	38,0	38,0	38,0	-	-	-	-
EER	W/W	41,84	42,13	41,48	41,37	41,45	41,52	42,01	42,42	-	-	-	-
Water flow rate system side	l/h	146.560	151.590	166.730	177.640	191.820	206.010	217.280	228.590	-	-	-	-
Pressure drop system side	kPa	105	113	106	106	106	71	84	84	-	-	-	-

Size		3902	4202	4502	4802	5202	5602	6002	6402	6903	7203	8403	9603
Model: P													
Cooling performance chiller operation													
Cooling capacity	kW	848,0	877,0	965,0	1028,0	1110,0	1192,0	1257,0	1322,0	-	-	-	-
Input power	kW	197,0	209,0	220,0	234,0	251,0	268,0	291,0	314,0	-	-	-	-
Cooling total input current	A	330,00	346,00	377,00	411,00	430,00	450,00	485,00	520,00	-	-	-	-
EER	W/W	4,31	4,20	4,38	4,40	4,43	4,45	4,32	4,21	-	-	-	-
Water flow rate system side	l/h	145.850	150.820	165.970	176.870	190.950	205.020	216.210	227.390	-	-	-	-
Pressure drop system side	kPa	74	80	79	79	79	45	53	53	-	-	-	-
Cooling performances with free-cooling													
Cooling capacity	kW	780,0	786,0	914,0	981,0	1053,0	1125,0	1139,0	1151,0	-	-	-	-
Input power	kW	17,8	17,8	21,0	22,6	24,2	25,9	25,9	25,9	-	-	-	-
Free cooling total input current	A	26,0	26,0	31,0	33,0	36,0	38,0	38,0	38,0	-	-	-	-
EER	W/W	43,88	44,20	43,48	43,37	43,45	43,52	44,06	44,51	-	-	-	-
Water flow rate system side	l/h	145.850	150.820	165.970	176.870	190.950	205.020	216.210	227.390	-	-	-	-
Pressure drop system side	kPa	104	112	105	105	105	70	84	84	-	-	-	-

Cooling performance chiller operation: System side water heat exchanger 25 °C/20 °C; External air 35 °C; Chiller operation 100%; Free-cooling 0%
Cooling performances with free-cooling: System side water heat exchanger 25 °C; External air 12°C

ELECTRIC DATA

Size			1402	1602	1802	2002	2202	2352	2502	2652	2802	3002	3202	3402	3602
Electric data															
Maximum current (FLA)	A	A	204,0	226,0	251,0	257,0	273,0	290,0	306,0	335,0	355,0	380,0	405,0	428,0	440,0
	E,U	A	204,0	226,0	261,0	267,0	273,0	299,0	316,0	345,0	364,0	390,0	415,0	437,0	450,0
	N	A	214,0	236,0	270,0	277,0	283,0	309,0	325,0	354,0	374,0	399,0	425,0	447,0	469,0
Peak current (LRA)	A	A	277,0	285,0	299,0	336,0	350,0	346,0	359,0	439,0	451,0	515,0	568,0	622,0	592,0
	E,U	A	277,0	285,0	308,0	345,0	350,0	356,0	368,0	449,0	461,0	525,0	578,0	632,0	601,0
	N	A	287,0	295,0	318,0	355,0	360,0	366,0	378,0	458,0	471,0	535,0	588,0	641,0	621,0

Size			3902	4202	4502	4802	5202	5602	6002	6402	6903	7203	8403	9603
Electric data														
Maximum current (FLA)	A	A	473,0	497,0	538,0	570,0	590,0	620,0	668,0	701,0	831,0	863,0	933,0	1.051,0
	E,U	A	483,0	516,0	548,0	595,0	615,0	645,0	688,0	730,0	841,0	882,0	-	-
	N	A	508,0	531,0	583,0	624,0	654,0	683,0	716,0	749,0	-	-	-	-
Peak current (LRA)	A	A	601,0	625,0	680,0	710,0	846,0	886,0	965,0	958,0	902,0	932,0	1.137,0	1.205,0
	E,U	A	611,0	644,0	690,0	735,0	871,0	911,0	984,0	986,0	911,0	951,0	-	-
	N	A	636,0	659,0	724,0	764,0	910,0	949,0	1.013,0	1.006,0	-	-	-	-

Data calculated without hydronic kit and accessories.

GENERAL TECHNICAL DATA

Refrigerant circuit

Size			1402	1602	1802	2002	2202	2352	2502	2652	2802	3002	3202	3402	3602
Compressor															
Type	A,E,N,U	type	Screw												
Compressor regulation	A,E,N,U	Type	On-Off												
Number	A,E,N,U	no.	2	2	2	2	2	2	2	2	2	2	2	2	2
Circuits	A,E,N,U	no.	2	2	2	2	2	2	2	2	2	2	2	2	2
Refrigerant	A,E,N,U	type	R134a												
Potential global heating (GWP)	A,E,N,U		1430												

Size			3902	4202	4502	4802	5202	5602	6002	6402	6903	7203	8403	9603
Compressor														
Type	A,E,N,U	type	Screw											
Compressor regulation	A,E,N,U	Type	On-Off											
Number	A	no.	2	2	2	2	2	2	2	2	3	3	3	3
	E,U	no.	2	2	2	2	2	2	2	2	3	3	-	-
	N	no.	2	2	2	2	2	2	2	2	-	-	-	-
Circuits	A	no.	2	2	2	2	2	2	2	2	3	3	3	3
	E,U	no.	2	2	2	2	2	2	2	2	3	3	-	-
	N	no.	2	2	2	2	2	2	2	2	-	-	-	-
Refrigerant	A,E,N,U	type	R134a											
Potential global heating (GWP)	A,E,N,U		1430											

System side heat exchanger

Size			1402	1602	1802	2002	2202	2352	2502	2652	2802	3002	3202	3402	3602
System side heat exchanger															
Type	A,E,N,U	type	Shell and tube												
Number	A,E,N,U	no.	1	1	1	1	1	1	1	1	1	1	1	1	1

Size			3902	4202	4502	4802	5202	5602	6002	6402	6903	7203	8403	9603
System side heat exchanger														
Type	A,E,N,U	type	Shell and tube											
Number	A	no.	1	1	1	1	1	1	1	1	2	2	2	2
	E	no.	1	1	1	1	1	1	1	1	2	2	-	-
	N	no.	1	1	2	2	2	2	2	2	-	-	-	-
	U	no.	1	1	1	1	1	2	2	2	2	2	-	-

Fans

Size			1402	1602	1802	2002	2202	2352	2502	2652	2802	3002	3202	3402	3602
Inverter fan															
Type	A,E,N,U	type	Axial												
Number	A	no.	8	8	8	8	10	10	10	12	12	12	12	14	14
	E,U	no.	8	8	10	10	10	12	12	14	14	14	14	16	16
	N	no.	10	10	12	12	12	14	14	16	16	16	16	18	20

Size			3902	4202	4502	4802	5202	5602	6002	6402	6903	7203	8403	9603
Inverter fan														
Type	A,E,N,U	type	Axial											
Number	A	no.	16	16	18	18	18	20	22	22	28	28	30	34
	E,U	no.	18	20	20	22	22	24	26	28	30	32	-	-
	N	no.	22	22	26	28	30	32	32	32	-	-	-	-

Sound data

Size			1402	1602	1802	2002	2202	2352	2502	2652	2802	3002	3202	3402	3602
Sound data calculated in cooling mode (1)															
Sound power level	A	dB(A)	97,0	97,0	97,0	97,0	98,0	98,0	98,0	98,0	98,0	99,0	99,0	100,0	101,0
	E	dB(A)	93,0	93,0	93,0	94,0	94,0	93,0	93,0	93,0	93,0	95,0	96,0	98,0	98,0
	N	dB(A)	93,0	93,0	94,0	94,0	94,0	94,0	93,0	93,0	93,0	94,0	96,0	98,0	99,0
	U	dB(A)	97,0	97,0	98,0	98,0	98,0	99,0	99,0	99,0	99,0	99,0	100,0	101,0	102,0

(1) Sound power calculated on the basis of measurements made in accordance with UNI EN ISO 9614-2, as required for Eurovent certification. Sound pressure (cold functioning) measured in free field, 10m away from the unit external surface (in compliance with UNI EN ISO 3744).

Size			3902	4202	4502	4802	5202	5602	6002	6402	6903	7203	8403	9603
Sound data calculated in cooling mode (1)														
Sound power level	A	dB(A)	101,0	100,0	101,0	101,0	101,0	102,0	102,0	102,0	104,0	104,0	105,0	105,0
	E	dB(A)	98,0	96,0	97,0	97,0	99,0	100,0	100,0	99,0	99,0	99,0	-	-
	N	dB(A)	98,0	97,0	97,0	97,0	99,0	100,0	100,0	99,0	-	-	-	-
	U	dB(A)	101,0	101,0	101,0	102,0	102,0	103,0	103,0	103,0	104,0	104,0	-	-

(1) Sound power calculated on the basis of measurements made in accordance with UNI EN ISO 9614-2, as required for Eurovent certification. Sound pressure (cold functioning) measured in free field, 10m away from the unit external surface (in compliance with UNI EN ISO 3744).

DIMENSIONS

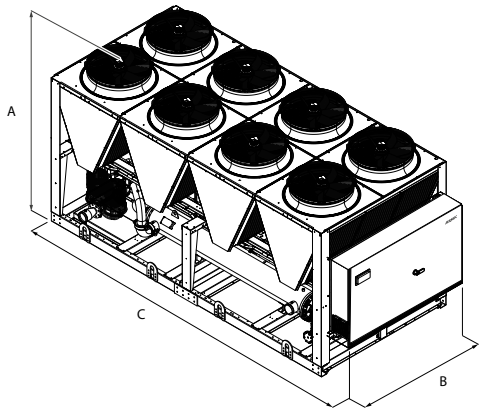

Size			1402	1602	1802	2002	2202	2352	2502	2652	2802	3002	3202	3402	3602
Dimensions and weights															
A	A,E,N,U	mm	2.450	2.450	2.450	2.450	2.450	2.450	2.450	2.450	2.450	2.450	2.450	2.450	2.450
B	A,E,N,U	mm	2.200	2.200	2.200	2.200	2.200	2.200	2.200	2.200	2.200	2.200	2.200	2.200	2.200
C	A	mm	5.160	5.160	5.160	5.160	6.350	6.350	6.350	7.140	7.140	7.140	7.140	8.330	8.330
	E,U	mm	5.160	5.160	6.350	6.350	6.350	7.140	7.140	8.330	8.330	8.330	8.330	9.520	9.520
	N	mm	6.350	6.350	7.140	7.140	7.140	8.330	8.330	9.520	9.520	9.520	9.520	10.710	11.900

Size			3902	4202	4502	4802	5202	5602	6002	6402	6903	7203	8403	9603
Dimensions and weights														
A	A	mm	2.450	2.450	2.450	2.450	2.450	2.450	2.450	2.450	2.450	2.450	2.450	2.450
	E,U	mm	2.450	2.450	2.450	2.450	2.450	2.450	2.450	2.450	2.450	2.450	-	-
	N	mm	2.450	2.450	2.450	2.450	2.450	2.450	2.450	2.450	-	-	-	-
B	A	mm	2.200	2.200	2.200	2.200	2.200	2.200	2.200	2.200	2.200	2.200	2.200	2.200
	E,U	mm	2.200	2.200	2.200	2.200	2.200	2.200	2.200	2.200	2.200	2.200	-	-
	N	mm	2.200	2.200	2.200	2.200	2.200	2.200	2.200	2.200	-	-	-	-
C	A	mm	9.520	9.520	10.710	10.710	10.710	11.900	13.090	13.090	16.660	16.660	17.850	20.230
	E,U	mm	10.710	11.900	11.900	13.090	13.090	14.280	15.470	16.660	17.850	19.040	-	-
	N	mm	13.090	13.090	15.470	16.660	17.850	19.040	19.040	19.040	-	-	-	-

For transport reasons, the units with the depth of more than 13090 mm are shipped separately.

Aermec reserves the right to make any modifications deemed necessary. All data is subject to change without notice. Aermec does not assume responsibility or liability for errors or omissions.

Aermec S.p.A.
Via Roma, 996 - 37040 Bevilacqua (VR) - Italia
Tel. 0442633111 - Telefax 044293577
www.aermec.com