NSMI 1251-6102 F

Air-water chiller with free-cooling

Cooling capacity 286 ÷ 1280 kW

- **High efficiency also at partial loads**
- **Microchannel coil**
- **Low electrical consumption**

DESCRIPTION

Air-cooled outdoor chiller designed to meet air conditioning needs in residential/commercial complexes or industrial applications.
Outdoor units with high-efficiency screw compressors axial fans, microchannel external coils and plant side shell and tube heat exchanger.
In the unit with desuperheater, it is also possible to produce free-hot water.
The base, the structure and the panels are made of galvanized steel treated with polyester paint RAL 9003.

VERSIONS

A High efficiency
E Silenced high efficiency

FEATURES

Operating field

Operation at full load up to 50 °C external air temperature. Unit can produce chilled water (up to -6 °C).

Units mono or dual-circuit

Unit with 1–2 refrigerant circuits.
The single circuit units have the inverter compressor, while the dual-circuit have an asynchronous compressor on/off switch and an inverter,the combination provides both high efficiency at part load and full load

Aluminium microchannel coils

The microchannel condensing aluminum coils ensure high levels of efficiency, reduced quantities of refrigerant and lower unit weight. The treatment "O" available as configurator it ensures high resistance to corrosion even in the most aggressive environments.

Free-cooling water coils

These units also have a water coil dedicated to free-cooling mode.
Free-cooling offers significant energy saving in applications that require cooling all year round.
As soon as the outside air temperature allows, a valve makes the water flow towards the free-cooling battery which is cooled directly by the air. The compressors are completely shut down, if possible, leading to considerable electrical savings.

- *A "P" free-cooling plus model with the oversized water battery can be chosen for applications in which a higher free-cooling performance is required.*

Integrated hydronic kit

Integrated hydronic kit containing the main hydraulic components; available with various configurations, to obtain a solution that allows you to save money and to facilitate installation.

Low noise version

Silenced versions feature a special compressor jacket which ensures a further noise reduction of approximately 4 dB.

CONTROL PCO[5]

Microprocessor adjustment, with 7", touch screen keyboard, which allows to navigate intuitively among the various screens, allowing to modify the operating parameters and graphically view the progress of some variables in real time and the ad adjustment includes complete management of the alarms and their log.
Further features:
— Possibility to control two units in a Master-Slave configuration
— The presence of a programmable timer allows functioning time periods and a possible second set-point to be set.
— The temperature control takes place with the integral proportional logic, based on the water output temperature.

ACCESSORIES

AER485P1: RS-485 interface for supervising systems with MODBUS protocol. 1 accessory is provided for each unit control board.
AERBAC-ONE: Ethernet communication interface for Bacnet/IP and Modbus TCP/IP protocols, HTTPS protocol for web interface, encrypted communication protocols and access credential management in accordance with the latest standards. One accessory is provided for each unit control board.
AERBACP: Ethernet communication interface for Bacnet/IP and Modbus TCP/IP protocols. 1 accessory is provided for each unit control board.
AERNET: The device remotely controls, manages and remotely monitors a chiller/heat pump using a PC, smartphone or table via a Cloud connection. AERNET acts as Master while each connected unit is configured as Slave up

to a maximum of 6 control cards. The connection is made via cable and/or USB key. Wi-Fi connectivity is not available. It is also possible to save a log file with all the data from the connected units to your terminal with a simple click for possible post-analysis. With the purchase of the Router, the Customer benefits from a 24-month free period during which he can use the Aernet Service at no additional cost. At the end of this initial period, the Service may be renewed by subscribing to a 1, 2 or 3 year subscription. For further details on costs and renewal methods, please contact our office or consult the technical documentation available on our website. www.aermec.com.

FB1: Air filter to protect the micro-channel coils. Formed of a frame and a composite baffle in micro-expanded aluminium mesh, with particularly low pressure drops.
MULTICHILLER-EVO: Control, switch-on and switch-off system of the single chillers where multiple units are installed in parallel (max. no. 9), always ensuring constant flow rate to the evaporators.
AVX: Spring anti-vibration supports.

FACTORY FITTED ACCESSORIES

GP_: Anti-intrusion grid kit
KRS: Electric heater for the heat exchanger

ACCESSORIES COMPATIBILITY

Model	Ver	1251	1601	1801	2352	2652	2802	3202	3402	3802	4102	4402	4802	5202	5702	6102
AER485P1	A,E	•	•	•												
AER485P1 x no. 2	A,E				•	•	•	•	•	•	•	•	•	•	•	•
AERBAC-ONE	A,E	•	•	•												
AERBAC-ONE x no. 2	A,E				•	•	•	•	•	•	•	•	•	•	•	•
AERBACP	A,E	•	•	•												
AERBACP x no. 2	A,E				•	•	•	•	•	•	•	•	•	•	•	•
AERNET	A,E	•	•	•	•	•	•	•	•	•	•	•	•	•	•	•
FB1	A,E	•	•	•	•	•	•	•	•	•	•	•	•	•	•	•
MULTICHILLER-EVO	A,E	•	•	•	•	•	•	•	•	•	•	•	•	•	•	•

Ver	1251	1601	1801	2352	2652	2802	3202	3402	3802	4102	4402	4802	5202	5702	6102
A, E	GP4V	GP4V	GP5V	GP5V	GP6V	GP7V	GP7V	GP7V	GP8V	GP9V	GP10V	GP11V	GP11V	GP11V	GP11V

A grey background indicates the accessory must be assembled in the factory

Antivibration - NSMI free-cooling

Ver	1251	1601	1801	2352	2652	2802	3202	3402	3802	4102	4402	4802	5202	5702	6102
Integrated hydronic kit: 00															
A	AVX991	AVX992	AVX993	AVX966	AVX970	AVX995	AVX995	AVX995	AVX996	AVX988	AVX989	AVX990	AVX990	AVX990	AVX990
E	AVX991	AVX992	AVX994	AVX966	AVX970	AVX995	AVX995	AVX995	AVX996	AVX988	AVX989	AVX990	AVX990	AVX990	AVX990

Antivibration - NSMI free-cooling plus

Ver	1251	1601	1801	2352	2652	2802	3202	3402	3802	4102	4402	4802	5202	5702	6102
Integrated hydronic kit: 00															
A	AVX991	AVX992	AVX993	AVX966	AVX970	AVX995	AVX995	AVX995	AVX996	AVX988	AVX989	AVX990	AVX990	AVX990	AVX990
E	AVX991	AVX992	AVX994	AVX966	AVX970	AVX995	AVX995	AVX999	AVX996	AVX988	AVX989	AVX990	AVX990	AVX990	AVX990

Heater exchangers

Ver	1251	1601	1801	2352	2652	2802	3202	3402	3802	4102	4402	4802	5202	5702	6102
A	KRS23	KRS23	KRS23	KRS23	KRS23	KRS23	-	KRS24	KRS24	KRS24	KRS24	KRS24	KRS24	KRS24	KRS24
E	KRS23	KRS23	KRS23	KRS23	KRS23	KRS23	KRS23	KRS24	KRS24	KRS24	KRS24	KRS24	KRS24	KRS24	KRS24

The accessory cannot be fitted on the configurations indicated with -
A grey background indicates the accessory must be assembled in the factory

CONFIGURATOR

Field		Description
1,2,3,4		**NSMI**
5,6,7,8		**Size** 1251, 1601, 1801, 2352, 2652, 2802, 3202, 3402, 3802, 4102, 4402, 4802, 5202, 5702, 6102
9		**Model**
	F	Free-cooling
	P	Free-cooling plus (1)
10		**Heat recovery**
	D	With desuperheater (2)
	°	Without heat recovery
11		**Version**
	A	High efficiency
	E	Silenced high efficiency
12		**Coils / free-cooling coils**
	O	Painted alluminium microchannel / Copper painted aluminium
	R	Copper-copper/Copper-copper
	V	Copper-painted alumimium / Copper-painted alumimium
	°	Alluminium microchannel / Copper - aluminium
13		**Fans**
	J	Inverter
	°	Standard
14		**Power supply**
	°	400V ~ 3 50Hz with magnet circuit breakers
15,16		**Integrated hydronic kit**
	00	Without hydronic kit
		Kit with n° 1 pump
	PA	Pump A
	PB	Pump B
	PC	Pump C
	PD	Pump D
	PE	Pump E
	PF	Pump F
	PG	Pump G
	PH	Pump H
	PI	Pump I
	PJ	Pump J (3)
		Pump n° 1 pump + stand-by pump
	DA	Pump A + stand-by pump
	DB	Pump B + stand-by pump
	DC	Pump C + stand-by pump
	DD	Pump D + stand-by pump
	DE	Pump E + stand-by pump
	DF	Pump F + stand-by pump
	DG	Pump G + stand-by pump
	DH	Pump H + stand-by pump
	DI	Pump I + stand-by pump
	DJ	Pump J + stand-by pump (3)
		Kit with 2 pumps
	TF	Double pump F
	TG	Double pump G
	TH	Double pump H
	TI	Double pump I
	TJ	Double pump J (3)
17		**Refrigerant gas**
	°	R134a

(1) The Free-Cooling Plus "P" models are only compatible with"°" ed "O"
(2) The temperature of the water in the heat exchanger inlet must never drop below 35°C.
(3) For all configurations including pump J please contact the factory.

PERFORMANCE SPECIFICATIONS

NSMI - free-cooling (FA/FE - PA/PE)

Size			1251	1601	1801	2352	2652	2802	3202	3402	3802	4102	4402	4802	5202	5702	6102
Model: F																	
Cooling performance chiller operation (1)																	
Cooling capacity	A,E	kW	286,5	385,6	455,6	496,5	587,5	649,6	718,4	784,3	832,8	929,0	989,0	1096,3	1164,2	1208,4	1280,3
Input power	A,E	kW	96,6	126,7	157,5	177,7	206,3	221,2	244,7	272,7	280,5	324,3	343,8	368,4	417,3	436,6	477,9
Cooling total input current	A,E	A	166,00	212,00	261,00	309,00	356,00	381,00	417,00	456,00	470,00	547,00	580,00	644,00	692,00	728,00	761,00
EER	A,E	W/W	2,97	3,04	2,89	2,79	2,85	2,94	2,94	2,88	2,97	2,86	2,88	2,98	2,79	2,77	2,68
Water flow rate system side	A,E	l/h	49.230	66.245	78.283	85.309	100.931	111.607	123.424	134.748	143.088	159.614	169.917	188.349	200.020	207.622	219.967
Pressure drop system side	A,E	kPa	52	78	75	48	67	68	76	46	54	68	79	80	90	94	107
Cooling performances with free-cooling (2)																	
Cooling capacity	A,E	kW	254,5	276,0	340,9	346,5	414,6	649,6	488,1	495,1	559,2	628,2	692,4	762,8	771,1	775,7	782,2
Input power	A,E	kW	15,0	15,0	18,7	18,7	22,5	26,2	26,2	26,2	30,0	33,7	37,5	41,2	41,2	41,2	41,2
Free cooling total input current	A,E	A	26,0	25,0	31,0	33,0	39,0	45,0	45,0	44,0	50,0	57,0	63,0	72,0	68,0	69,0	66,0
EER	A,E	W/W	19,97	18,41	18,19	18,49	18,43	18,22	18,60	18,87	18,65	18,62	18,47	18,50	18,70	18,81	18,97
Water flow rate system side	A,E	l/h	49.230	66.245	78.283	85.309	100.931	111.607	123.424	134.748	143.088	159.614	169.917	188.349	200.020	207.622	219.967
Pressure drop system side	A,E	kPa	80	121	128	88	109	109	124	94	99	108	125	127	143	157	169

(1) System side water heat exchanger 12 °C/7 °C; External air 35 °C; Chiller operation 100%; Free-cooling 0%
(2) Acqua scambiatore lato utenza 12 °C / * °C ; Aria esterna 2 °C

Size			1251	1601	1801	2352	2652	2802	3202	3402	3802	4102	4402	4802	5202	5702	6102
Model: P																	
Cooling performance chiller operation (1)																	
Cooling capacity	A,E	kW	285,5	383,5	453,4	493,5	584,0	646,4	714,7	778,5	827,8	923,5	983,6	1090,1	1156,6	1200,5	1270,3
Input power	A,E	kW	97,4	127,8	158,9	179,7	208,6	223,4	247,5	275,8	283,4	327,8	347,4	372,4	421,9	441,5	483,8
Cooling total input current	A,E	A	168,00	214,00	263,00	312,00	360,00	385,00	421,00	461,00	474,00	553,00	585,00	644,00	692,00	728,00	761,00
EER	A,E	W/W	2,93	3,00	2,85	2,75	2,80	2,89	2,89	2,82	2,92	2,82	2,83	2,93	2,74	2,72	2,63
Water flow rate system side	A,E	l/h	49.048	65.887	77.903	84.789	100.332	111.060	122.801	133.758	142.233	158.667	168.998	187.289	198.712	206.254	218.254
Pressure drop system side	A,E	kPa	51	78	74	47	67	67	75	45	53	67	79	79	89	92	105
Cooling performances with free-cooling (2)																	
Cooling capacity	A,E	kW	271,8	296,0	365,5	371,4	444,5	512,7	523,2	530,1	599,3	673,3	742,3	817,7	826,2	830,9	837,1
Input power	A,E	kW	15,2	15,2	19,0	19,0	22,8	26,7	26,7	26,7	30,5	34,3	38,1	41,9	41,9	41,9	41,9
Free cooling total input current	A,E	A	26,0	25,0	32,0	33,0	39,0	46,0	45,0	45,0	51,0	58,0	64,0	72,0	69,0	69,0	66,0
EER	A,E	W/W	17,84	19,43	19,19	19,50	19,45	19,23	19,63	19,89	19,67	19,64	19,49	19,52	19,72	19,83	19,98
Water flow rate system side	A,E	l/h	49.048	65.887	77.903	84.789	100.332	111.060	122.801	133.758	142.233	158.667	168.998	187.289	198.712	206.254	218.254
Pressure drop system side	A,E	kPa	80	120	127	87	108	108	123	93	98	107	123	125	141	155	166

(1) System side water heat exchanger 12 °C/7 °C; External air 35 °C; Chiller operation 100%; Free-cooling 0%
(2) Acqua scambiatore lato utenza 12 °C / * °C ; Aria esterna 2 °C

ENERGY INDICES (REG. 2016/2281 EU)

Size			1251	1601	1801	2352	2652	2802	3202	3402	3802	4102	4402	4802	5202	5702	6102
Model: F																	
SEPR - (EN 14825: 2018)																	
SEPR	A,E	W/W	6,95	6,32	6,23	6,60	6,73	7,06	6,85	6,65	6,98	6,74	6,83	7,24	7,11	7,28	7,05
Water Regulation (1)	A,E	type	FW/FO	FW/FO	FW/FO	FW/FO	FW/FO	FW/FO	FW/FO	FW/FO	FW/FO	FW/FO	FW/FO	FW/FO	FW/FO	FW/FO	FW/FO

(1) VW/VO - variable water flow rate/variable outlet temperature; FW/VO - fixed water flow rate/variable outlet temperature; VW/FO - variable water flow rate/fixed outlet temperature; FW/FO - fixed water flow rate/fixed outlet temperature.

Size			1251	1601	1801	2352	2652	2802	3202	3402	3802	4102	4402	4802	5202	5702	6102
Model: P																	
SEPR - (EN 14825: 2018)																	
SEPR	A,E	W/W	7,02	6,39	6,31	6,69	6,83	7,19	6,93	6,69	7,06	6,82	6,93	7,30	7,15	7,31	7,05
Water Regulation (1)	A,E	type	FW/FO	FW/FO	FW/FO	FW/FO	FW/FO	FW/FO	FW/FO	FW/FO	FW/FO	FW/FO	FW/FO	FW/FO	FW/FO	FW/FO	FW/FO

(1) VW/VO - variable water flow rate/variable outlet temperature; FW/VO - fixed water flow rate/variable outlet temperature; VW/FO - variable water flow rate/fixed outlet temperature; FW/FO - fixed water flow rate/fixed outlet temperature.

ELECTRIC DATA

Size			1251	1601	1801	2352	2652	2802	3202	3402	3802	4102	4402	4802	5202	5702	6102
Electric data																	
Maximum current (FLA)	A,E	A	259,9	299,9	388,4	452,7	485,9	534,4	534,4	582,4	670,9	727,4	774,9	874,2	917,2	1.002,2	1.036,2
Peak current (LRA)	A,E	A	59,9	59,9	68,4	582,4	617,9	666,4	666,4	790,4	878,9	1.008,4	1.080,0	1.180,2	1.335,2	1.420,2	1.532,2

GENERAL TECHNICAL DATA

Refrigerant circuit

Size			1251	1601	1801	2352	2652	2802	3202	3402	3802	4102	4402	4802	5202	5702	6102
Compressor																	
Type	A,E	type	Screw														
Compressor regulation	A,E	type	I	I	I	I+On/Off	I+On/Off	I+On/Off	I+On/Off	I+On/Off	I+On/Off	I+On/Off	I+On/Off	I+On/Off	I+On/Off	I+On/Off	I+On/Off
Number	A,E	no.	1	1	1	2	2	2	2	2	2	2	2	2	2	2	2
Circuits	A,E	no.	1	1	1	2	2	2	2	2	2	2	2	2	2	2	2
Refrigerant	A,E	type	R134a														
Total refrigerant charge (1)	A,E	kg	28,00	28,00	30,00	82,00	84,00	111,00	115,00	125,00	128,00	144,00	152,00	186,00	186,00	195,00	195,00
Potential global heating (GWP)	A,E		1430														
Equivalent CO_2	A,E	tCO_2eq	40,04	40,04	42,90	117,26	120,12	158,73	164,45	178,75	183,04	205,92	217,36	265,98	265,98	278,85	278,85

(1) The load indicated in the table is an estimated and preliminary value. The final value of the refrigerant load is indicated on the unit's technical label. For further information contact the office.

System side heat exchanger

Size			1251	1601	1801	2352	2652	2802	3202	3402	3802	4102	4402	4802	5202	5702	6102
System side heat exchanger																	
Type	A,E	type	Shell and tube														
Number	A,E	no.	1	1	1	1	1	1	1	1	1	1	1	1	1	1	1
System side hydraulic connections																	
Connections (in/out)	A,E	Type	Grooved joints														
Sizes (in/out)	A,E	Ø	5″	6″	6″	6″	6″	6″	6″	8″	8″	8″	8″	10″	10″	10″	10″

Fans

Size			1251	1601	1801	2352	2652	2802	3202	3402	3802	4102	4402	4802	5202	5702	6102
Fan																	
Type	A,E	type	Axial														
Fan motor	A,E	type	Asynchronous with phase cut														
Number	A,E	no.	8	8	10	10	12	14	14	14	16	18	20	22	22	22	22
Air flow rate	A,E	m^3/h	109600	109600	137000	137000	164400	191800	191800	191800	219200	146600	274000	301400	301400	301400	301400

Sound data

Size			1251	1601	1801	2352	2652	2802	3202	3402	3802	4102	4402	4802	5202	5702	6102
Sound data calculated in cooling mode (1)																	
Sound power level	A	dB(A)	98,1	99,2	99,4	99,4	99,7	100,7	100,7	101,1	101,2	101,3	101,9	103,6	103,8	103,8	103,9
	E	dB(A)	94,2	96,0	96,3	95,7	96,2	96,6	96,6	97,8	97,9	98,3	98,6	100,2	100,2	100,2	100,3

(1) Sound power calculated on the basis of measurements made in accordance with UNI EN ISO 9614-2, as required for Eurovent certification. Sound pressure (cold functioning) measured in free field, 10m away from the unit external surface (in compliance with UNI EN ISO 3744).

DIMENSIONS

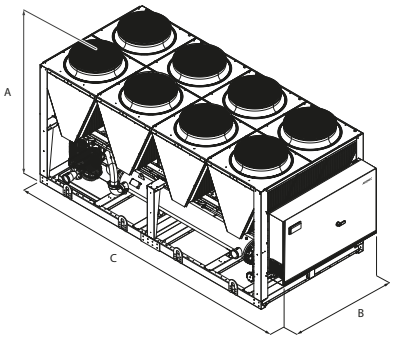

Size			1251	1601	1801	2352	2652	2802	3202	3402	3802	4102	4402	4802	5202	5702	6102
Dimensions and weights																	
A	A,E	mm	2450	2450	2450	2450	2450	2450	2450	2450	2450	2450	2450	2450	2450	2450	2450
B	A,E	mm	2200	2200	2200	2200	2200	2200	2200	2200	2200	2200	2200	2200	2200	2200	2200
C	A,E	mm	4760	4760	5950	6400	7140	8330	8330	8330	9520	10710	11900	13090	13090	13090	13090

Aermec reserves the right to make any modifications deemed necessary.
All data is subject to change without notice. Aermec does not assume responsibility or liability for errors or omissions.

Aermec S.p.A.
Via Roma, 996 - 37040 Bevilacqua (VR) - Italia
Tel. 0442633111 - Telefax 044293577
www.aermec.com