NSM 1402-9603 F

Air-water chiller with free-cooling

Cooling capacity 306 ÷ 2028 kW

- **Microchannel coil**
- **Night mode**
- **Operation up to 50 °C outdoor air**
- **High efficiency also at partial loads**

DESCRIPTION

Air-cooled outdoor chiller designed to meet air conditioning needs in residential/commercial complexes or industrial applications.
These are outdoor units with screw compressors, axial fans, micro-channel coils, and shell and tube heat exchangers
The base, the structure and the panels are made of galvanized steel treated with polyester paint RAL 9003.

VERSIONS

A High efficiency
E Silenced high efficiency
N Silenced very high efficiency
U Very high efficiency

FEATURES

Operating field

Operation at full load up to 50 °C external air temperature depending on size and version. For further details refer to the selection software/technical documentation.

Unit with 2/3 cooling circuits

Unit with 2/3 refrigerant circuits designed to provide maximum efficiency at full load, ensuring high efficiency at partial loads also and ensuring continuity in case one of the circuits stops.

Condensation control temperature

Fitted as standard with a device for electronic condensation control so that the unit can work even with low temperatures, adapting the air flow rate to the actual system request in order to reduce consumption.

Aluminium microchannel coils

The whole range uses microchannel condenser coils allowing reduction of refrigerant charge but keeping the same high efficiency.

Free-cooling water coils

These units also have a water coil dedicated to free-cooling mode.
Free-cooling offers significant energy saving in applications that require cooling all year round.
As soon as the outside air temperature allows, a valve makes the water flow towards the free-cooling battery which is cooled directly by the air. The compressors are completely shut down, if possible, leading to considerable electrical savings.

■ *A "P" free-cooling plus model with the oversized water battery can be chosen for applications in which a higher free-cooling performance is required.*

Electronic expansion valve

Electronic thermostatic as standard from size 5202 to 6402 and from 8403 to 9603.
The possibility to use electronic expansion valve, offers significant benefits, especially when the chiller is working with partial loads, increasing the energy efficiency of the unit.

Integrated hydronic kit

To obtain a solution that offers economic savings and easy installation, these units can be configured with an integrated hydronic kit on both the service side and the recovery side.
The kit contains the main hydraulic components, and is available in various configurations with a single pump or a standby pump too, so the customer can choose the right useful head.

CONTROL

Units include 1 control board for each compressor.
Microprocessor control, with keyboard and LCD display, for easy access on the unit with a menu available in several languages.

— The presence of a programmable timer allows functioning time periods and a possible second set-point to be set.
— The temperature control takes place with the integral proportional logic, based on the water output temperature.
— **Night mode:** only in the **non-silenced** versions is it possible to set a silenced operating mode, which is useful for example at night for greater acoustic comfort but always guarantees performance even at peak load times.
— Possibility to control two units in a Master-Slave configuration (from size 1402 to 6402)

ACCESSORIES

AER485P1: RS-485 interface for supervising systems with MODBUS protocol. 1 accessory is provided for each unit control board.

AERBAC-ONE: Ethernet communication interface for Bacnet/IP and Modbus TCP/IP protocols, HTTPS protocol for web interface, encrypted communication protocols and access credential management in accordance with the latest standards. One accessory is provided for each unit control board.
AERBACP: Ethernet communication interface for Bacnet/IP and Modbus TCP/IP protocols. 1 accessory is provided for each unit control board.
AERNET: The device remotely controls, manages and remotely monitors a chiller/heat pump using a PC, smartphone or table via a Cloud connection. AERNET acts as Master while each connected unit is configured as Slave up to a maximum of 6 control cards. The connection is made via cable and/or USB key. Wi-Fi connectivity is not available. It is also possible to save a log file with all the data from the connected units to your terminal with a simple click for possible post-analysis. With the purchase of the Router, the Customer benefits from a 24-month free period during which he can use the Aernet Service at no additional cost. At the end of this initial period, the Service may be renewed by subscribing to a 1, 2 or 3 year subscription. For further details on costs and renewal methods, please contact our office or consult the technical documentation available on our website. www.aermec.com.
MULTICHILLER-EVO: Control, switch-on and switch-off system of the single chillers where multiple units are installed in parallel (max. no. 9), always ensuring constant flow rate to the evaporators.
PRV3: Allows you to control the chiller at a distance.
AVX: Spring anti-vibration supports.

FACTORY FITTED ACCESSORIES

RIF: Power factor correction. Connected in parallel to the motor allowing about 10% reduction of input current.
GP_: Anti-intrusion grid kit
KRS: Electric heater for the heat exchanger

ACCESSORIES COMPATIBILITY

Model	Ver	1402	1602	1802	2002	2202	2352	2502	2652	2802	3002	3202	3402	3602	3902
AER485P1 x no. 2	A,E,N,U	•	•	•	•	•	•	•	•	•	•	•	•	•	•
AERBAC-ONE x no. 2	A,E,N,U	•	•	•	•	•	•	•	•	•	•	•	•	•	•
AERBACP x no. 2	A,E,N,U	•	•	•	•	•	•	•	•	•	•	•	•	•	•
AERNET	A,E,N,U	•	•	•	•	•	•	•	•	•	•	•	•	•	•
MULTICHILLER-EVO	A,E,N,U	•	•	•	•	•	•	•	•	•	•	•	•	•	•
PRV3	A,E,N,U	•	•	•	•	•	•	•	•	•	•	•	•	•	•

Model	Ver	4202	4502	4802	5202	5602	6002	6402	6503	6703	6903	7203	8403	9603
AER485P1 x no. 2	A,E,N,U	•	•	•	•	•	•	•						
AER485P1 x no. 3	A								•	•	•	•	•	•
	E,U								•	•	•	•		
	N								•					
AERBAC-ONE x no. 2	A,E,N,U	•	•	•	•	•	•	•						
AERBAC-ONE x no. 3	A								•	•	•	•	•	•
	E,U								•	•	•	•		
	N								•					
AERBACP x no. 2	A,E,N,U	•	•	•	•	•	•	•						
AERBACP x no. 3	A								•	•	•	•	•	•
	E,U								•	•	•	•		
	N								•					
AERNET	A	•	•	•	•	•	•	•	•	•	•	•	•	•
	E,U	•	•	•	•	•	•	•	•	•	•	•		
	N	•	•	•	•	•	•	•	•					
MULTICHILLER-EVO	A	•	•	•	•	•	•	•	•	•	•	•	•	•
	E,U	•	•	•	•	•	•	•	•	•	•	•		
	N	•	•	•	•	•	•	•	•					
PRV3	A	•	•	•	•	•	•	•	•	•	•	•	•	•
	E,U	•	•	•	•	•	•	•	•	•	•	•		
	N	•	•	•	•	•	•	•	•					

Antivibration - NSM free - cooling

Ver	1402	1602	1802	2002	2202	2352	2502	2652	2802	3002	3202	3402	3602	3902
Integrated hydronic kit: 00														
A	AVX929	AVX929	AVX929	AVX932	AVX933	AVX933	AVX933	AVX934	AVX937	AVX937	AVX937	AVX938	AVX938	AVX942
E, U	AVX929	AVX929	AVX930	AVX933	AVX933	AVX934	AVX934	AVX935	AVX935	AVX935	AVX935	AVX939	AVX939	AVX940
N	AVX930	AVX930	AVX931	AVX931	AVX934	AVX935	AVX935	AVX936	AVX936	AVX936	AVX936	AVX940	AVX941	AVX943

Ver	4202	4502	4802	5202	5602	6002	6402	6503	6703	6903	7203	8403	9603
Integrated hydronic kit: 00													
A	AVX942	AVX944	AVX944	AVX944	AVX945	AVX947	AVX947	AVX953	AVX953	AVX957	AVX954	AVX956	AVX955
E, U	AVX941	AVX945	AVX947	AVX947	AVX950	AVX952	AVX948	AVX954	AVX956	AVX956	AVX958	-	-
N	AVX943	AVX946	AVX948	AVX949	AVX951	AVX951	AVX951	AVX955	-	-	-	-	-

Anti-intrusion grid

Ver	1402	1602	1802	2002	2202	2352	2502	2652	2802	3002	3202	3402	3602	3902
A	GP4V	GP4V	GP4V	GP4V	GP5V	GP5V	GP5V	GP6V	GP6V	GP6V	GP6V	GP7V	GP7V	GP8V
E, U	GP4V	GP4V	GP5V	GP5V	GP5V	GP6V	GP6V	GP7V	GP7V	GP7V	GP7V	GP8V	GP8V	GP9V
N	GP5V	GP5V	GP6V	GP6V	GP6V	GP7V	GP7V	GP8V	GP8V	GP8V	GP8V	GP9V	GP10V	GP11V

A grey background indicates the accessory must be assembled in the factory

Ver	4202	4502	4802	5202	5602	6002	6402	6503	6703	6903	7203	8403	9603
A	GP8V	GP9V	GP9V	GP9V	GP11V	GP11V	GP11V	GP4V+GP8V	GP4V+GP8V	GP9V	GP5V+GP9V	GP5V+GP10V	GP6V+GP11V
E, U	GP10V	GP10V	GP11V	GP11V	GP6V+GP6V	GP6V+GP7V	GP7V+GP7V	GP5V+GP9V	GP5V+GP10V	GP5V+GP10V	GP6V+GP11V	-	-
N	GP11V	GP6V+GP7V	GP7V+GP7V	GP7V+GP8V	GP8V+GP8V	GP8V+GP8V	GP8V	GP6V+GP11V	-	-	-	-	-

A grey background indicates the accessory must be assembled in the factory

Heater exchangers

Ver	1402	1602	1802	2002	2202	2352	2502	2652	2802	3002	3202	3402	3602	3902
A	KRS22	KRS22	KRS23	KRS23	KRS23	KRS23	KRS23	KRS23	KRS23	KRS23	KRS23	KRS24	KRS24	KRS24
E, N, U	KRS23	KRS23	KRS23	KRS23	KRS23	KRS23	KRS23	KRS23	KRS23	KRS23	KRS23	KRS24	KRS24	KRS24

A grey background indicates the accessory must be assembled in the factory

Ver	4202	4502	4802	5202	5602	6002	6402	6503	6703	6903	7203	8403	9603
A	KRS24	KRS24	KRS23	KRS23	KRS24	KRS24	KRS24	KRS23+KRS24	KRS23+KRS24	KRS23+KRS24	KRS23+KRS24	KRS23+KRS24	KRS23+KRS24
E, U	KRS24	KRS24	KRS23	KRS23	KRS23+KRS23	KRS23+KRS23	KRS23+KRS23	KRS23+KRS24	KRS23+KRS24	KRS23+KRS24	KRS23+KRS24	-	-
N	KRS24	KRS23+KRS23	KRS23+KRS23	KRS23+KRS23	KRS23+KRS23	KRS23+KRS23	KRS23+KRS23	KRS23+KRS24	-	-	-	-	-

A grey background indicates the accessory must be assembled in the factory

Power factor correction

Ver	1402	1602	1802	2002	2202	2352	2502	2652	2802
A	RIFNSM1402Q	RIFNSM1602Q	RIFNSM1802Q	RIFNSM2002Q	RIFNSM2202Q	RIFNSM2352Q	RIFNSM2502Q	RIFNSM2652Q	RIFNSM2802C
E	RIFNSM1402Q	RIFNSM1602Q	RIFNSM1802Q	RIFNSM2002Q	RIFNSM2202Q	RIFNSM2352C	RIFNSM2502C	RIFNSM2652Q	RIFNSM2802C
N	RIFNSM1402Q	RIFNSM1602Q	RIFNSM1802C	RIFNSM2002Q	RIFNSM2202C	RIFNSM2352C	RIFNSM2502C	RIFNSM2652Q	RIFNSM2802C
U	RIFNSM1402Q	RIFNSM1602Q	RIFNSM1802Q	RIFNSM2002C	RIFNSM2202Q	RIFNSM2352C	RIFNSM2502C	RIFNSM2652Q	RIFNSM2802C

A grey background indicates the accessory must be assembled in the factory

Ver	3002	3202	3402	3602	3902	4202	4502	4802	5202
A, E, U	RIFNSM3002C	RIFNSM3202C	RIFNSM3402C	RIFNSM3602C	RIFNSM3902C	RIFNSM4202C	RIFNSM4502C	RIFNSM4802C	RIFNSM5202C
N	RIFNSM3002C	RIFNSM3202C	RIFNSM3402C	RIFNSM3602C	RIFNSM3902C	RIFNSM4202C	-	-	-

The accessory cannot be fitted on the configurations indicated with -
A grey background indicates the accessory must be assembled in the factory

Ver	5602	6002	6402	6503	6703	6903	7203	8403	9603
A	RIFNSM5602C	RIFNSM6002C	RIFNSM6402C	-	-	-	-	-	-

The accessory cannot be fitted on the configurations indicated with -
A grey background indicates the accessory must be assembled in the factory

CONFIGURATOR

Field		Description
1,2,3		**NSM**
4,5,6,7		**Size** 1402, 1602, 1802, 2002, 2202, 2352, 2502, 2652, 2802, 3002, 3202, 3402, 3602, 3902, 4202, 4502, 4802, 5202, 5602, 6002, 6402, 6503, 6703, 6903, 7203, 8403, 9603
8		**Operating field**
	X	Electronic thermostatic expansion valve (1)
	Y	Low temperature mechanic thermostatic valve (2)
	Z	Low temperature electronic thermostatic valve (2)
	°	Standard mechanic thermostatic valve (3)
9		**Model**
	F	Free-cooling
	P	Free-cooling plus (4)
10		**Heat recovery**
	D	With desuperheater
	°	Without heat recovery
11		**Version**
	A	High efficiency
	E	Silenced high efficiency
	N	Silenced very high efficiency
	U	Very high efficiency
12		**Coils / free-cooling coils**
	I	Copper-aluminium / Copper-aluminium
	O	Painted alluminium microchannel / Copper painted aluminium
	R	Copper-copper/Copper-copper
	V	Copper-painted alumimium / Copper-painted alumimium
	°	Alluminium microchannel / Copper - aluminium
13		**Fans**
	J	Inverter
	°	Standard
14		**Power supply**
	2	230V ~ 3 50Hz with fuses (5)
	4	230V ~ 3 50Hz with magnet circuit breakers (5)
	8	400V ~ 3 50Hz with magnet circuit breakers

Field		Description
	°	400V ~ 3 50Hz with fuses
15,16		**Integrated hydronic kit**
	00	Without hydronic kit
	PA	Pump A
	PB	Pump B
	PC	Pump C
	PD	Pump D
	PE	Pump E
	PF	Pump F
	PG	Pump G
	PH	Pump H
	PI	Pump I
	PJ	Pump J (6)
	DA	Pump A + stand-by pump
	DB	Pump B + stand-by pump
	DC	Pump C + stand-by pump
	DD	Pump D + stand-by pump
	DE	Pump E + stand-by pump
	DF	Pump F + stand-by pump
	DG	Pump G + stand-by pump
	DH	Pump H + stand-by pump
	DI	Pump I + stand-by pump
	DJ	Pump J + stand-by pump (6)
	TF	Double pump F (7)
	TG	Double pump G (7)
	TH	Double pump H (7)
	TI	Double pump I (7)
	TJ	Double pump J (7)

(1) Water produced from 4 °C ÷ 18 °C
(2) Water produced from 4 °C ÷ -6 °C
(3) Water produced from 4 °C ÷ 15 °C
(4) The Free-Cooling Plus "P" models are only compatible with"°" ed "O"
(5) available only for size from 1402 to 2202
(6) For all configurations including pump J please contact the factory.
(7) The unit from 5603 to 9603 can only have hydronic kit "TF - TG - TH- TI - TJ"

PERFORMANCE SPECIFICATIONS

NSM - A

Size		1402	1602	1802	2002	2202	2352	2502	2652	2802	3002	3202	3402	3602	3902
Model: F															
Cooling performance chiller operation (1)															
Cooling capacity	kW	306,5	350,2	396,8	450,5	505,3	522,5	556,5	600,8	649,8	678,4	726,3	813,3	872,8	954,1
Input power	kW	102,8	117,6	136,7	158,3	168,9	180,5	194,5	203,0	220,4	235,0	252,8	269,7	295,6	317,9
Cooling total input current	A	182,30	206,20	230,60	268,00	291,30	311,40	335,20	351,30	378,40	400,00	426,50	450,90	486,50	530,40
EER	W/W	2,98	2,98	2,90	2,85	2,99	2,90	2,86	2,96	2,95	2,89	2,87	3,02	2,95	3,00
Water flow rate system side	l/h	52.654	60.163	68.174	77.407	86.812	89.765	95.621	103.224	111.642	116.561	124.785	139.737	149.958	163.932
Pressure drop system side	kPa	45	59	54	36	45	48	54	63	67	73	65	43	50	61
Cooling performances with free-cooling (2)															
Cooling capacity	kW	347,7	362,0	373,1	381,9	468,1	471,2	476,5	560,7	569,1	573,2	578,8	671,5	677,9	770,2
Input power	kW	15,0	15,0	15,0	15,0	18,7	18,7	18,7	22,5	22,5	22,5	22,5	26,2	26,2	30,0
Free cooling total input current	A	30,4	30,4	30,4	30,4	38,0	38,0	38,0	45,6	45,6	45,6	45,6	53,2	53,2	60,8
EER	W/W	23,18	24,14	24,88	25,47	24,97	25,14	25,42	24,93	25,30	25,48	25,73	25,59	25,83	25,68
Water flow rate system side	l/h	60.230	68.250	77.490	86.910	89.860	95.730	103.340	111.770	116.690	124.920	139.890	150.120	164.110	171.460
Pressure drop system side	kPa	66	86	85	76	78	84	95	98	107	116	113	87	99	107

(1) System side water heat exchanger 12 °C/7 °C; External air 35 °C; Chiller operation 100%; Free-cooling 0%
(2) Acqua scambiatore lato utenza 12 °C / * °C ; Aria esterna 2 °C

Size		1402	1602	1802	2002	2202	2352	2502	2652	2802	3002	3202	3402	3602	3902
Model: P															
Cooling performance chiller operation (1)															
Cooling capacity	kW	305,8	349,3	395,0	447,3	502,1	519,1	552,6	597,2	645,4	674,3	721,9	807,8	865,0	946,8
Input power	kW	103,7	118,8	138,1	160,2	170,8	182,6	197,0	205,3	223,1	238,4	257,1	273,3	299,3	321,8
Cooling total input current	A	182,30	206,20	230,60	268,00	291,30	311,40	335,20	351,30	378,40	400,00	426,50	450,90	486,50	530,40
EER	W/W	2,95	2,94	2,86	2,79	2,94	2,84	2,81	2,91	2,89	2,83	2,81	2,96	2,89	2,94
Water flow rate system side	l/h	52.546	60.019	67.864	76.853	86.266	89.180	94.948	102.598	110.891	115.859	124.023	138.789	148.609	162.675
Pressure drop system side	kPa	45	59	54	36	45	48	54	63	67	73	65	43	50	61
Cooling performances with free-cooling (2)															
Cooling capacity	kW	371,8	388,1	400,1	409,1	501,9	505,2	510,5	601,2	610,0	614,2	619,7	719,2	725,2	824,6
Input power	kW	15,2	15,2	15,2	15,2	19,0	19,0	19,0	22,9	22,9	22,9	22,9	26,7	26,7	30,5
Free cooling total input current	A	30,7	30,7	30,7	30,7	38,4	38,4	38,4	46,1	46,1	46,1	46,1	53,7	53,7	61,4
EER	W/W	24,41	25,48	26,27	26,86	26,36	26,53	26,81	26,31	26,69	26,88	27,12	26,98	27,20	27,07
Water flow rate system side	l/h	52.710	60.230	68.250	77.490	86.910	89.860	95.730	103.340	111.770	116.690	124.920	139.890	150.120	164.110
Pressure drop system side	kPa	66	86	86	76	79	84	95	98	107	117	114	87	100	108

(1) System side water heat exchanger 12 °C/7 °C; External air 35 °C; Chiller operation 100%; Free-cooling 0%
(2) Acqua scambiatore lato utenza 12 °C / * °C ; Aria esterna 2 °C

NSM - A

Size		4202	4502	4802	5202	5602	6002	6402	6503	6703	6903	7203	8403	9603
Model: F														
Cooling performance chiller operation (1)														
Cooling capacity	kW	996,8	1082,3	1128,3	1167,3	1222,8	1304,9	1346,7	1459,2	1501,9	1659,0	1705,0	1838,1	2028,1
Input power	kW	346,1	365,7	391,9	422,5	438,9	452,7	472,4	492,1	520,2	557,2	583,3	659,0	704,1
Cooling total input current	A	581,40	614,00	654,60	703,80	733,30	761,10	795,90	821,10	872,10	945,10	985,80	1.100,00	1.197,70
EER	W/W	2,88	2,96	2,88	2,76	2,79	2,88	2,85	2,97	2,89	2,98	2,92	2,79	2,88
Water flow rate system side	l/h	171.269	185.947	193.855	200.561	210.092	224.201	231.379	250.713	258.050	285.029	292.937	315.803	348.457
Pressure drop system side	kPa	66	81	88	75	82	96	102	61	66	81	88	82	102
Cooling performances with free-cooling (2)														
Cooling capacity	kW	774,7	867,5	872,2	875,9	966,0	1058,3	1062,8	1158,4	1162,7	1346,7	1351,7	1449,5	1636,8
Input power	kW	30,0	33,7	33,7	33,7	37,5	41,2	41,2	45,0	45,0	52,5	52,5	56,2	63,7
Free cooling total input current	A	60,8	68,4	68,4	68,4	76,0	83,6	83,6	91,2	91,2	106,4	106,4	114,0	129,2
EER	W/W	25,83	25,71	25,85	25,96	25,77	25,66	25,77	25,75	25,85	25,66	25,75	25,78	25,68
Water flow rate system side	l/h	186.150	194.070	200.780	210.330	224.450	231.640	250.990	258.340	285.350	293.260	316.150	348.840	348.457
Pressure drop system side	kPa	117	130	141	131	134	145	154	107	117	130	141	134	154

(1) System side water heat exchanger 12 °C/7 °C; External air 35 °C; Chiller operation 100%; Free-cooling 0%
(2) Acqua scambiatore lato utenza 12 °C / * °C ; Aria esterna 2 °C

Size		4202	4502	4802	5202	5602	6002	6402	6503	6703	6903	7203	8403	9603
Model: P														
Cooling performance chiller operation (1)														
Cooling capacity	kW	988,7	1074,2	1119,1	1156,4	1212,7	1295,2	1336,2	1447,7	1489,6	1646,9	1691,9	1822,8	2013,1
Input power	kW	350,6	370,3	397,1	428,3	444,3	458,0	478,2	498,2	527,1	564,0	590,8	667,0	712,4
Cooling total input current	A	581,40	614,00	654,60	703,80	733,30	761,10	795,90	821,10	872,10	945,10	985,80	1.100,00	1.197,70
EER	W/W	2,82	2,90	2,82	2,70	2,73	2,83	2,79	2,91	2,83	2,92	2,86	2,73	2,83
Water flow rate system side	l/h	169.873	184.553	192.278	198.678	208.362	222.522	229.577	248.739	255.936	282.961	290.686	313.186	345.875
Pressure drop system side	kPa	66	81	88	75	82	96	102	61	66	81	88	82	102
Cooling performances with free-cooling (2)														
Cooling capacity	kW	828,9	928,7	933,1	936,5	1033,8	1133,1	1137,4	1239,8	1243,9	1442,0	1446,8	1551,1	1752,4
Input power	kW	30,5	34,3	34,3	34,3	38,1	41,9	41,9	45,7	45,7	53,3	53,3	57,1	64,7
Free cooling total input current	A	61,4	69,1	69,1	69,1	76,8	84,5	84,5	92,1	92,1	107,5	107,5	115,2	130,5
EER	W/W	27,21	27,09	27,22	27,32	27,15	27,05	27,15	27,13	27,22	27,04	27,13	27,15	27,07
Water flow rate system side	l/h	171.460	186.150	194.070	200.780	210.330	224.450	231.640	250.990	258.340	285.350	293.260	316.150	348.840
Pressure drop system side	kPa	117	130	141	131	134	146	155	108	117	130	141	134	155

(1) System side water heat exchanger 12 °C/7 °C; External air 35 °C; Chiller operation 100%; Free-cooling 0%
(2) Acqua scambiatore lato utenza 12 °C / * °C ; Aria esterna 2 °C

NSM - E

Size		1402	1602	1802	2002	2202	2352	2502	2652	2802	3002	3202	3402	3602	3902
Model: F															
Cooling performance chiller operation (1)															
Cooling capacity	kW	319,8	365,8	417,7	473,0	509,1	549,8	568,8	618,6	646,3	675,1	715,5	796,7	851,7	929,6
Input power	kW	105,5	123,3	137,5	159,4	178,3	183,3	195,5	205,2	220,4	235,9	253,5	270,8	297,1	320,1
Cooling total input current	A	177,30	205,70	223,10	261,00	294,50	304,80	325,90	341,60	365,40	388,50	414,70	437,50	474,10	516,80
EER	W/W	3,03	2,97	3,04	2,97	2,85	3,00	2,91	3,01	2,93	2,86	2,82	2,94	2,87	2,90
Water flow rate system side	l/h	54.946	62.848	71.763	81.260	87.462	94.455	97.732	106.280	111.041	115.993	122.937	136.886	146.332	159.723
Pressure drop system side	kPa	33	37	32	37	43	50	54	53	58	64	64	43	49	60
Cooling performances with free-cooling (2)															
Cooling capacity	kW	308,8	317,5	389,9	399,1	403,2	476,4	479,1	552,1	556,5	560,4	564,7	643,3	648,3	727,0
Input power	kW	11,0	11,0	13,7	13,7	13,7	16,5	16,5	19,2	19,2	19,2	19,2	22,0	22,0	24,7
Free cooling total input current	A	15,9	15,9	19,9	19,9	19,9	23,9	23,9	27,9	27,9	27,9	27,9	31,8	31,8	35,8
EER	W/W	28,07	28,87	28,36	29,03	29,33	28,88	29,04	28,69	28,91	29,11	29,34	29,25	29,47	29,38
Water flow rate system side	l/h	55.010	62.920	71.840	81.350	87.560	94.560	97.840	106.400	111.160	116.120	123.070	137.040	146.490	159.900
Pressure drop system side	kPa	56	67	56	68	78	80	85	82	90	98	102	77	88	97

(1) System side water heat exchanger 12 °C/7 °C; External air 35 °C; Chiller operation 100%; Free-cooling 0%
(2) Acqua scambiatore lato utenza 12 °C / * °C ; Aria esterna 2 °C

Size		1402	1602	1802	2002	2202	2352	2502	2652	2802	3002	3202	3402	3602	3902
Model: P															
Cooling performance chiller operation (1)															
Cooling capacity	kW	316,7	363,1	414,5	469,5	504,1	545,4	564,0	613,8	640,8	669,8	710,9	790,6	843,5	921,3
Input power	kW	106,6	124,7	138,6	161,1	181,0	185,4	197,8	207,6	223,1	239,2	257,8	274,6	301,1	324,4
Cooling total input current	A	177,30	205,70	223,10	261,00	294,50	304,80	325,90	341,60	365,40	388,50	414,70	437,50	474,10	516,80
EER	W/W	2,97	2,91	2,99	2,91	2,79	2,94	2,85	2,96	2,87	2,80	2,76	2,88	2,80	2,84
Water flow rate system side	l/h	54.406	62.391	71.215	80.666	86.616	93.710	96.909	105.464	110.105	115.087	122.135	135.840	144.915	158.291
Pressure drop system side	kPa	33	37	32	37	43	50	54	54	59	64	65	43	49	60
Cooling performances with free-cooling (2)															
Cooling capacity	kW	328,8	338,7	415,7	425,8	429,8	508,2	511,0	589,0	593,7	597,7	602,1	686,0	690,6	774,8
Input power	kW	11,2	11,2	13,9	13,9	13,9	16,7	16,7	19,5	19,5	19,5	19,5	22,3	22,3	25,1
Free cooling total input current	A	16,1	16,1	20,1	20,1	20,1	24,1	24,1	28,1	28,1	28,1	28,1	32,2	32,2	36,2
EER	W/W	29,48	30,36	29,81	30,53	30,82	30,37	30,54	30,17	30,41	30,62	30,84	30,75	30,95	30,87
Water flow rate system side	l/h	55.010	62.920	71.840	81.350	87.560	94.560	97.840	106.400	111.160	116.120	123.070	137.040	146.490	159.900
Pressure drop system side	kPa	57	67	57	68	78	80	86	83	90	98	103	77	88	98

(1) System side water heat exchanger 12 °C/7 °C; External air 35 °C; Chiller operation 100%; Free-cooling 0%
(2) Acqua scambiatore lato utenza 12 °C / * °C ; Aria esterna 2 °C

NSM - E

Size		4202	4502	4802	5202	5602	6002	6402	6503	6703	6903	7203	8403	9603
Model: F														
Cooling performance chiller operation (1)														
Cooling capacity	kW	995,2	1051,6	1137,0	1159,2	1217,3	1279,4	1341,6	1434,0	1499,6	1598,6	1684,0	-	-
Input power	kW	339,9	370,0	389,4	418,0	436,6	448,9	461,2	491,1	510,9	568,9	588,3	-	-
Cooling total input current	A	554,80	601,50	631,60	677,80	708,40	731,90	755,40	803,90	832,30	923,90	945,40	-	-
EER	W/W	2,93	2,84	2,92	2,77	2,79	2,85	2,91	2,92	2,93	2,81	2,86	-	-
Water flow rate system side	l/h	170.980	180.685	195.353	199.172	209.139	219.823	230.507	246.385	257.643	274.665	289.333	-	-
Pressure drop system side	kPa	68	79	73	76	67	72	82	60	68	79	73	-	-
Cooling performances with free-cooling (2)														
Cooling capacity	kW	804,0	809,4	888,6	890,5	967,2	1043,7	1119,7	1129,8	1206,8	1215,8	1295,1	-	-
Input power	kW	27,5	27,5	30,2	30,2	33,0	35,7	38,5	38,5	41,2	41,2	44,0	-	-
Free cooling total input current	A	39,8	39,8	43,8	43,8	47,8	51,7	55,7	55,7	59,7	59,7	63,7	-	-
EER	W/W	29,24	29,44	29,38	29,44	29,31	29,20	29,09	29,35	29,26	29,48	29,44	-	-
Water flow rate system side	l/h	171.170	180.890	195.570	199.390	209.370	220.070	230.760	246.660	257.930	274.970	289.650	-	-
Pressure drop system side	kPa	104	119	113	117	107	110	119	97	104	119	113	-	-

(1) System side water heat exchanger 12 °C/7 °C; External air 35 °C; Chiller operation 100%; Free-cooling 0%
(2) Acqua scambiatore lato utenza 12 °C / * °C ; Aria esterna 2 °C

Size		4202	4502	4802	5202	5602	6002	6402	6503	6703	6903	7203	8403	9603
Model: P														
Cooling performance chiller operation (1)														
Cooling capacity	kW	987,5	1041,9	1127,1	1148,0	1206,7	1269,3	1332,0	1421,7	1487,9	1583,2	1668,4	-	-
Input power	kW	344,2	375,3	394,8	424,0	442,2	454,4	466,6	497,6	517,4	577,4	596,8	-	-
Cooling total input current	A	554,80	601,50	631,60	677,80	708,40	731,90	755,40	803,90	832,30	923,90	945,40	-	-
EER	W/W	2,87	2,78	2,86	2,71	2,73	2,79	2,85	2,86	2,88	2,74	2,80	-	-
Water flow rate system side	l/h	169.667	179.011	193.652	197.235	207.320	218.083	228.845	244.269	255.645	272.005	286.645	-	-
Pressure drop system side	kPa	69	80	74	76	68	72	82	60	69	80	74	-	-
Cooling performances with free-cooling (2)														
Cooling capacity	kW	857,5	862,4	947,1	948,8	1031,1	1113,1	1194,5	1204,3	1286,9	1295,0	1379,9	-	-
Input power	kW	27,9	27,9	30,7	30,7	33,5	36,3	39,0	39,0	41,8	41,8	44,6	-	-
Free cooling total input current	A	40,2	40,2	44,2	44,2	48,2	52,3	56,3	56,3	60,3	60,3	64,3	-	-
EER	W/W	30,74	30,92	30,87	30,92	30,81	30,70	30,59	30,84	30,76	30,95	30,92	-	-
Water flow rate system side	l/h	171.170	180.890	195.570	199.390	209.370	220.070	230.760	246.660	257.930	274.970	289.650	-	-
Pressure drop system side	kPa	105	119	113	117	107	111	120	98	105	119	113	-	-

(1) System side water heat exchanger 12 °C/7 °C; External air 35 °C; Chiller operation 100%; Free-cooling 0%
(2) Acqua scambiatore lato utenza 12 °C / * °C ; Aria esterna 2 °C

NSM - U

Size		1402	1602	1802	2002	2202	2352	2502	2652	2802	3002	3202	3402	3602	3902
Model: F															
Cooling performance chiller operation (1)															
Cooling capacity	kW	328,1	378,5	429,3	491,9	531,3	568,6	589,0	638,0	667,8	695,1	735,8	824,8	891,0	967,9
Input power	kW	105,3	121,3	136,2	155,8	172,9	180,0	191,0	202,4	216,1	228,4	242,4	263,0	288,2	311,5
Cooling total input current	A	185,80	211,50	232,00	266,30	297,10	312,90	332,30	352,60	374,20	392,30	413,00	442,70	477,20	522,60
EER	W/W	3,12	3,12	3,15	3,16	3,07	3,16	3,08	3,15	3,09	3,04	3,04	3,14	3,09	3,11
Water flow rate system side	l/h	56.372	65.027	73.755	84.508	91.287	97.691	101.204	109.611	114.731	119.418	126.414	141.715	153.088	166.304
Pressure drop system side	kPa	35	39	34	40	46	53	57	57	62	68	68	46	53	65
Cooling performances with free-cooling (2)															
Cooling capacity	kW	356,2	369,9	451,2	466,4	473,4	555,1	559,4	641,6	648,6	654,2	661,5	753,3	763,5	854,0
Input power	kW	15,0	15,0	18,7	18,7	18,7	22,5	22,5	26,2	26,2	26,2	26,2	30,0	30,0	33,7
Free cooling total input current	A	30,4	30,4	38,0	38,0	38,0	45,6	45,6	53,2	53,2	53,2	53,2	60,8	60,8	68,4
EER	W/W	23,76	24,67	24,07	24,88	25,26	24,68	24,87	24,45	24,71	24,93	25,21	25,12	25,46	25,31
Water flow rate system side	l/h	56.430	65.100	73.840	84.600	91.390	97.800	101.320	109.730	114.860	119.550	126.550	141.870	153.260	166.490
Pressure drop system side	kPa	59	71	60	73	85	85	92	88	96	104	108	82	96	105

(1) System side water heat exchanger 12 °C/7 °C; External air 35 °C; Chiller operation 100%; Free-cooling 0%
(2) Acqua scambiatore lato utenza 12 °C / * °C ; Aria esterna 2 °C

Size		1402	1602	1802	2002	2202	2352	2502	2652	2802	3002	3202	3402	3602	3902
Model: P															
Cooling performance chiller operation (1)															
Cooling capacity	kW	326,9	376,7	427,6	488,8	527,6	565,4	585,6	634,6	664,0	691,7	732,5	820,3	884,7	961,8
Input power	kW	106,3	122,5	137,6	157,4	174,8	181,8	193,0	204,4	218,3	231,1	245,7	266,0	291,3	314,8
Cooling total input current	A	185,80	211,50	232,00	266,30	297,10	312,90	332,30	352,60	374,20	392,30	413,00	442,70	477,20	522,60
EER	W/W	3,08	3,07	3,11	3,10	3,02	3,11	3,03	3,10	3,04	2,99	2,98	3,08	3,04	3,06
Water flow rate system side	l/h	56.168	64.715	73.458	83.974	90.642	97.138	100.613	109.029	114.089	118.834	125.850	140.933	152.002	165.249
Pressure drop system side	kPa	35	40	34	40	47	54	58	57	63	68	69	46	54	65
Cooling performances with free-cooling (2)															
Cooling capacity	kW	381,5	396,7	483,5	500,0	507,4	595,1	599,9	687,8	695,4	701,6	709,4	807,7	818,0	915,4
Input power	kW	15,2	15,2	19,0	19,0	19,0	22,9	22,9	26,7	26,7	26,7	26,7	30,5	30,5	34,3
Free cooling total input current	A	30,7	30,7	38,4	38,4	38,4	46,1	46,1	53,7	53,7	53,7	53,7	61,4	61,4	69,1
EER	W/W	25,04	26,04	25,39	26,26	26,65	26,05	26,25	25,80	26,09	26,32	26,61	26,51	26,85	26,71
Water flow rate system side	l/h	56.430	65.100	73.840	84.600	91.390	97.800	101.320	109.730	114.860	119.550	126.550	141.870	153.260	166.490
Pressure drop system side	kPa	60	72	60	74	85	86	92	88	96	104	109	83	96	106

(1) System side water heat exchanger 12 °C/7 °C; External air 35 °C; Chiller operation 100%; Free-cooling 0%
(2) Acqua scambiatore lato utenza 12 °C / * °C ; Aria esterna 2 °C

NSM - U

Size		4202	4502	4802	5202	5602	6002	6402	6503	6703	6903	7203	8403	9603
Model: F														
Cooling performance chiller operation (1)														
Cooling capacity	kW	1031,1	1095,0	1181,2	1208,8	1265,8	1326,2	1386,6	1491,1	1554,3	1666,6	1752,7	-	-
Input power	kW	332,0	358,4	379,0	405,3	426,4	440,0	453,5	478,4	498,9	549,8	570,4	-	-
Cooling total input current	A	564,10	604,80	638,60	681,50	718,30	746,00	773,70	811,60	846,20	926,20	954,20	-	-
EER	W/W	3,11	3,06	3,12	2,98	2,97	3,01	3,06	3,12	3,12	3,03	3,07	-	-
Water flow rate system side	l/h	177.155	188.137	202.935	207.692	217.477	227.858	238.239	256.194	267.046	286.336	301.135	-	-
Pressure drop system side	kPa	74	86	79	83	73	77	87	64	74	86	79	-	-
Cooling performances with free-cooling (2)														
Cooling capacity	kW	941,7	951,8	1043,5	1047,6	1134,8	1221,6	1307,8	1326,2	1413,8	1431,0	1522,9	-	-
Input power	kW	37,5	37,5	41,2	41,2	45,0	48,7	52,5	52,5	56,2	56,2	60,0	-	-
Free cooling total input current	A	76,0	76,0	83,6	83,6	91,2	98,8	106,4	106,4	114,0	114,0	121,6	-	-
EER	W/W	25,12	25,39	25,30	25,40	25,22	25,07	24,92	25,27	25,14	25,45	25,39	-	-
Water flow rate system side	l/h	177.350	188.350	203.160	207.920	217.720	228.110	238.500	256.480	267.340	286.650	301.470	-	-
Pressure drop system side	kPa	112	129	122	127	115	119	128	105	112	129	122	-	-

(1) System side water heat exchanger 12 °C/7 °C; External air 35 °C; Chiller operation 100%; Free-cooling 0%
(2) Acqua scambiatore lato utenza 12 °C / * °C ; Aria esterna 2 °C

Size		4202	4502	4802	5202	5602	6002	6402	6503	6703	6903	7203	8403	9603
Model: P														
Cooling performance chiller operation (1)														
Cooling capacity	kW	1025,3	1088,1	1174,0	1200,9	1257,9	1318,5	1379,2	1482,0	1545,4	1655,7	1741,6	-	-
Input power	kW	335,5	362,4	383,1	409,7	430,7	444,3	457,9	483,4	504,1	556,1	576,8	-	-
Cooling total input current	A	564,10	604,80	638,60	681,50	718,30	746,00	773,70	811,60	846,20	926,20	954,20	-	-
EER	W/W	3,06	3,00	3,06	2,93	2,92	2,97	3,01	3,07	3,07	2,98	3,02	-	-
Water flow rate system side	l/h	176.150	186.945	201.699	206.322	216.119	226.541	236.963	254.617	265.517	284.475	299.229	-	-
Pressure drop system side	kPa	74	86	79	83	73	78	88	65	74	86	80	-	-
Cooling performances with free-cooling (2)														
Cooling capacity	kW	1009,7	1020,0	1118,5	1122,6	1216,5	1309,9	1402,4	1421,6	1515,9	1533,4	1632,1	-	-
Input power	kW	38,1	38,1	41,9	41,9	45,7	49,5	53,3	53,3	57,1	57,1	60,9	-	-
Free cooling total input current	A	76,8	76,8	84,5	84,5	92,1	99,8	107,5	107,5	115,2	115,2	122,8	-	-
EER	W/W	26,51	26,78	26,70	26,80	26,62	26,46	26,30	26,66	26,54	26,84	26,78	-	-
Water flow rate system side	l/h	177.350	188.350	203.160	207.920	217.720	228.110	238.500	256.480	267.340	286.650	301.470	-	-
Pressure drop system side	kPa	113	129	122	128	116	119	128	106	113	130	123	-	-

(1) System side water heat exchanger 12 °C/7 °C; External air 35 °C; Chiller operation 100%; Free-cooling 0%
(2) Acqua scambiatore lato utenza 12 °C / * °C ; Aria esterna 2 °C

NSM - N

Size		1402	1602	1802	2002	2202	2352	2502	2652	2802	3002	3202	3402	3602	3902
Model: F															
Cooling performance chiller operation (1)															
Cooling capacity	kW	326,0	376,5	424,5	486,3	525,3	559,6	579,7	626,1	655,1	682,6	723,4	811,7	888,8	960,7
Input power	kW	103,6	119,3	134,4	153,8	170,9	178,3	189,4	200,8	214,8	227,9	242,9	263,8	283,0	307,1
Cooling total input current	A	174,80	199,90	218,40	252,60	283,30	297,40	316,90	335,20	357,10	376,50	398,70	426,60	452,00	496,60
EER	W/W	3,15	3,16	3,16	3,16	3,07	3,14	3,06	3,12	3,05	3,00	2,98	3,08	3,14	3,13
Water flow rate system side	l/h	56.017	64.687	72.926	83.554	90.260	96.150	99.597	107.568	112.546	117.285	124.287	139.460	152.703	165.051
Pressure drop system side	kPa	34	39	33	39	45	52	55	55	60	65	66	44	53	64
Cooling performances with free-cooling (2)															
Cooling capacity	kW	365,1	381,0	449,3	465,6	473,2	541,5	545,8	615,7	622,3	627,8	634,7	713,7	791,0	867,2
Input power	kW	13,7	13,7	16,5	16,5	16,5	19,2	19,2	22,0	22,0	22,0	22,0	24,7	27,5	30,2
Free cooling total input current	A	19,9	19,9	23,9	23,9	23,9	27,9	27,9	31,8	31,8	31,8	31,8	35,8	39,8	43,8
EER	W/W	26,56	27,71	27,24	28,22	28,69	28,13	28,36	27,99	28,29	28,54	28,86	28,84	28,77	28,67
Water flow rate system side	l/h	56.080	64.760	73.010	83.650	90.360	96.260	99.710	107.690	112.670	117.420	124.420	139.610	152.870	165.230
Pressure drop system side	kPa	51	61	51	63	73	76	82	79	87	94	98	74	83	93

(1) System side water heat exchanger 12 °C/7 °C; External air 35 °C; Chiller operation 100%; Free-cooling 0%
(2) Acqua scambiatore lato utenza 12 °C / * °C ; Aria esterna 2 °C

Size		1402	1602	1802	2002	2202	2352	2502	2652	2802	3002	3202	3402	3602	3902
Model: P															
Cooling performance chiller operation (1)															
Cooling capacity	kW	325,1	375,2	422,9	483,6	522,0	556,8	576,7	623,1	651,8	679,6	720,3	807,0	882,8	955,1
Input power	kW	104,5	120,4	135,6	155,5	172,9	180,2	191,5	202,9	217,2	230,8	246,4	267,1	286,2	310,3
Cooling total input current	A	174,80	199,90	218,40	252,60	283,30	297,40	316,90	335,20	357,10	376,50	398,70	426,60	452,00	496,60
EER	W/W	3,11	3,12	3,12	3,11	3,02	3,09	3,01	3,07	3,00	2,94	2,92	3,02	3,09	3,08
Water flow rate system side	l/h	55.859	64.457	72.661	83.082	89.692	95.662	99.076	107.055	111.979	116.764	123.749	138.653	151.682	164.102
Pressure drop system side	kPa	35	39	33	39	46	52	56	55	61	66	67	45	54	64
Cooling performances with free-cooling (2)															
Cooling capacity	kW	387,5	406,1	478,1	496,6	505,0	577,5	582,4	656,5	663,9	670,1	677,6	761,7	844,0	925,5
Input power	kW	13,9	13,9	16,7	16,7	16,7	19,5	19,5	22,3	22,3	22,3	22,3	25,1	27,9	30,7
Free cooling total input current	A	20,1	20,1	24,1	24,1	24,1	28,1	28,1	32,2	32,2	32,2	32,2	36,2	40,2	44,2
EER	W/W	27,79	29,12	28,57	29,68	30,18	29,58	29,83	29,42	29,75	30,03	30,37	30,35	30,26	30,16
Water flow rate system side	l/h	56.080	64.760	73.010	83.650	90.360	96.260	99.710	107.690	112.670	117.420	124.420	139.610	152.870	165.230
Pressure drop system side	kPa	52	62	52	64	74	77	82	80	87	94	99	75	83	94

(1) System side water heat exchanger 12 °C/7 °C; External air 35 °C; Chiller operation 100%; Free-cooling 0%
(2) Acqua scambiatore lato utenza 12 °C / * °C ; Aria esterna 2 °C

NSM - N

Size		4202	4502	4802	5202	5602	6002	6402	6503	6703	6903	7203	8403	9603
Model: F														
Cooling performance chiller operation (1)														
Cooling capacity	kW	1004,9	1098,6	1161,7	1218,0	1274,5	1318,1	1361,6	1478,4	-	-	-	-	-
Input power	kW	332,9	349,5	369,2	392,7	416,2	433,5	450,9	472,0	-	-	-	-	-
Cooling total input current	A	544,10	569,70	600,10	638,50	677,00	708,30	739,70	770,60	-	-	-	-	-
EER	W/W	3,02	3,14	3,15	3,10	3,06	3,04	3,02	3,13	-	-	-	-	-
Water flow rate system side	l/h	172.652	188.754	199.587	209.274	218.966	226.457	233.947	254.013	-	-	-	-	-
Pressure drop system side	kPa	70	71	84	88	74	78	85	64	-	-	-	-	-
Cooling performances with free-cooling (2)														
Cooling capacity	kW	874,3	1018,1	1092,1	1164,5	1236,6	1246,2	1254,9	1339,1	-	-	-	-	-
Input power	kW	30,2	35,7	38,5	41,2	44,0	44,0	44,0	46,7	-	-	-	-	-
Free cooling total input current	A	43,8	51,7	55,7	59,7	63,7	63,7	63,7	67,7	-	-	-	-	-
EER	W/W	28,91	28,48	28,37	28,24	28,11	28,33	28,52	28,65	-	-	-	-	-
Water flow rate system side	l/h	172.840	188.960	199.810	209.510	219.210	226.710	234.210	254.300	-	-	-	-	-
Pressure drop system side	kPa	102	100	114	117	103	109	118	93	-	-	-	-	-

(1) System side water heat exchanger 12 °C/7 °C; External air 35 °C; Chiller operation 100%; Free-cooling 0%
(2) Acqua scambiatore lato utenza 12 °C / * °C ; Aria esterna 2 °C

Size		4202	4502	4802	5202	5602	6002	6402	6503	6703	6903	7203	8403	9603
Model: P														
Cooling performance chiller operation (1)														
Cooling capacity	kW	998,8	1092,7	1155,6	1211,7	1267,7	1310,9	1354,2	1470,0	-	-	-	-	-
Input power	kW	336,7	353,2	373,0	396,5	420,0	437,6	455,3	476,9	-	-	-	-	-
Cooling total input current	A	544,10	569,70	600,10	638,50	677,00	708,30	739,70	770,60	-	-	-	-	-
EER	W/W	2,97	3,09	3,10	3,06	3,02	3,00	2,97	3,08	-	-	-	-	-
Water flow rate system side	l/h	171.604	187.733	198.553	208.183	217.806	225.235	232.663	252.555	-	-	-	-	-
Pressure drop system side	kPa	70	71	85	89	75	78	85	64	-	-	-	-	-
Cooling performances with free-cooling (2)														
Cooling capacity	kW	933,0	1086,4	1165,3	1242,2	1318,7	1329,5	1339,1	1429,1	-	-	-	-	-
Input power	kW	30,7	36,3	39,0	41,8	44,6	44,6	44,6	47,4	-	-	-	-	-
Free cooling total input current	A	44,2	52,3	56,3	60,3	64,3	64,3	64,3	68,3	-	-	-	-	-
EER	W/W	30,41	29,96	29,84	29,69	29,55	29,79	30,01	30,14	-	-	-	-	-
Water flow rate system side	l/h	172.840	188.960	199.810	209.510	219.210	226.710	234.210	254.300	-	-	-	-	-
Pressure drop system side	kPa	102	101	114	118	104	109	118	94	-	-	-	-	-

(1) System side water heat exchanger 12 °C/7 °C; External air 35 °C; Chiller operation 100%; Free-cooling 0%
(2) Acqua scambiatore lato utenza 12 °C / * °C ; Aria esterna 2 °C

ENERGY INDICES (REG. 2016/2281 EU)

Size			1402	1602	1802	2002	2202	2352	2502	2652	2802	3002	3202	3402	3602	3902
Model: F																
SEPR - (EN 14825: 2018)																
SEPR	A	W/W	7,41	7,05	6,65	6,29	6,78	6,52	6,34	6,73	6,56	6,31	6,10	6,55	6,32	6,50
	E	W/W	7,22	6,77	7,10	6,65	6,30	6,89	6,59	6,81	6,69	6,42	6,09	6,28	6,23	6,44
	N	W/W	7,68	7,36	7,56	7,20	6,78	7,10	6,94	7,15	6,90	6,67	6,45	6,78	6,94	6,93
	U	W/W	7,50	7,13	7,47	7,13	6,79	7,22	6,97	7,28	7,03	6,82	6,62	6,97	6,75	6,86
Water Regulation (1)	A,E,N,U	type	FW/FO	FW/FO	FW/FO	FW/FO	FW/FO	FW/FO	FW/FO	FW/FO	FW/FO	FW/FO	FW/FO	FW/FO	FW/FO	FW/FO

(1) VW/VO - variable water flow rate/variable outlet temperature; FW/VO - fixed water flow rate/variable outlet temperature; VW/FO - variable water flow rate/fixed outlet temperature; FW/FO - fixed water flow rate/fixed outlet temperature.

Size			1402	1602	1802	2002	2202	2352	2502	2652	2802	3002	3202	3402	3602	3902
Model: P																
SEPR - (EN 14825: 2018)																
SEPR	A	W/W	7,38	7,12	6,67	6,25	6,79	6,49	6,27	6,71	6,49	6,23	5,99	6,51	6,26	6,44
	E	W/W	7,25	6,73	7,15	6,60	6,20	6,83	6,51	6,84	6,61	6,31	5,99	6,46	6,22	6,34
	N	W/W	7,71	7,39	7,62	7,22	6,83	7,18	6,91	7,16	6,88	6,63	6,39	6,75	6,90	6,88
	U	W/W	7,57	7,17	7,56	7,16	6,77	7,23	6,97	7,30	7,02	6,78	6,56	6,97	6,71	6,81
Water Regulation (1)	A,E,N,U	type	FW/FO	FW/FO	FW/FO	FW/FO	FW/FO	FW/FO	FW/FO	FW/FO	FW/FO	FW/FO	FW/FO	FW/FO	FW/FO	FW/FO

(1) VW/VO - variable water flow rate/variable outlet temperature; FW/VO - fixed water flow rate/variable outlet temperature; VW/FO - variable water flow rate/fixed outlet temperature; FW/FO - fixed water flow rate/fixed outlet temperature.

Size			4202	4502	4802	5202	5602	6002	6402	6503	6703	6903	7203	8403	9603
Model: F															
SEPR - (EN 14825: 2018)															
SEPR	A	W/W	6,18	6,40	6,17	5,87	6,04	6,24	6,13	6,61	6,38	6,69	6,52	6,18	6,44
	E	W/W	6,52	6,28	6,63	5,98	6,02	6,19	6,49	6,72	6,84	6,22	6,46	-	-
	N	W/W	6,65	6,88	7,12	7,03	6,96	6,74	6,72	7,28	-	-	-	-	-
	U	W/W	6,92	6,60	7,04	6,52	6,54	6,68	6,83	7,17	7,22	6,87	7,00	-	-
Water Regulation (1)	A	type	FW/FO	FW/FO	FW/FO	FW/FO	FW/FO	FW/FO	FW/FO	FW/FO	FW/FO	FW/FO	FW/FO	FW/FO	FW/FO
	E,U	type	FW/FO	FW/FO	FW/FO	FW/FO	FW/FO	FW/FO	FW/FO	FW/FO	FW/FO	FW/FO	FW/FO	-	-
	N	type	FW/FO	FW/FO	FW/FO	FW/FO	FW/FO	FW/FO	FW/FO	FW/FO	-	-	-	-	-

(1) VW/VO - variable water flow rate/variable outlet temperature; FW/VO - fixed water flow rate/variable outlet temperature; VW/FO - variable water flow rate/fixed outlet temperature; FW/FO - fixed water flow rate/fixed outlet temperature.

Size			4202	4502	4802	5202	5602	6002	6402	6503	6703	6903	7203	8403	9603
Model: P															
SEPR - (EN 14825: 2018)															
SEPR	A	W/W	6,09	6,31	6,06	5,76	5,95	6,14	6,01	6,57	6,32	6,64	6,44	6,13	6,37
	E	W/W	6,43	6,15	6,50	5,86	5,94	6,11	6,40	6,66	6,78	6,12	6,37	-	-
	N	W/W	6,59	7,00	7,07	6,99	6,94	6,81	6,68	7,25	-	-	-	-	-
	U	W/W	6,89	6,70	6,99	6,45	6,50	6,66	6,80	7,15	7,19	6,83	6,96	-	-
Water Regulation (1)	A	type	FW/FO	FW/FO	FW/FO	FW/FO	FW/FO	FW/FO	FW/FO	FW/FO	FW/FO	FW/FO	FW/FO	FW/FO	FW/FO
	E,U	type	FW/FO	FW/FO	FW/FO	FW/FO	FW/FO	FW/FO	FW/FO	FW/FO	FW/FO	FW/FO	FW/FO	-	-
	N	type	FW/FO	FW/FO	FW/FO	FW/FO	FW/FO	FW/FO	FW/FO	FW/FO	-	-	-	-	-

(1) VW/VO - variable water flow rate/variable outlet temperature; FW/VO - fixed water flow rate/variable outlet temperature; VW/FO - variable water flow rate/fixed outlet temperature; FW/FO - fixed water flow rate/fixed outlet temperature.

ELECTRIC DATA

Size			1402	1602	1802	2002	2202	2352	2502	2652	2802	3002	3202	3402	3602	3902
Electric data																
Maximum current (FLA)	A	A	243,9	271,9	299,1	332,5	374,4	395,7	417,0	450,2	474,9	474,9	474,9	531,4	579,4	635,9
	E,U	A	243,9	271,9	307,6	341,0	374,4	404,2	425,5	458,7	483,4	483,4	483,4	539,9	587,9	644,4
	N	A	252,4	280,4	316,1	349,5	382,9	412,7	434,0	467,2	491,9	491,9	491,9	548,4	604,9	667,2
Peak current (LRA)	A	A	265,5	307,3	350,2	388,2	419,8	466,8	484,0	519,5	529,4	529,4	529,4	661,9	701,8	831,3
	E,U	A	265,5	307,3	358,7	396,7	419,8	475,3	492,5	528,0	537,9	537,9	537,9	670,4	710,3	839,8
	N	A	274,0	315,8	367,2	405,2	428,3	483,8	501,0	536,5	546,4	546,4	546,4	678,9	727,3	862,6

Size			4202	4502	4802	5202	5602	6002	6402	6503	6703	6903	7203	8403	9603
Electric data															
Maximum current (FLA)	A	A	683,9	731,4	770,4	813,4	864,9	913,2	947,2	980,7	1.028,7	1.123,7	1.162,7	1.300,2	1.419,2
	E,U	A	700,9	739,9	793,2	836,2	887,7	930,2	972,7	997,7	1.054,2	1.132,2	1.179,7	-	-
	N	A	715,2	771,2	818,7	870,2	921,7	955,7	989,7	1.023,2	-	-	-	-	-
Peak current (LRA)	A	A	858,2	930,7	953,4	1.108,4	1.163,9	1.290,2	1.287,2	1.069,4	1.096,3	1.200,0	1.222,7	1.480,2	1.603,2
	E,U	A	875,2	939,2	976,2	1.131,2	1.186,7	1.307,2	1.312,7	1.086,4	1.121,8	1.208,5	1.239,7	-	-
	N	A	889,5	970,5	1.001,7	1.165,2	1.220,7	1.332,7	1.329,7	1.111,9	-	-	-	-	-

GENERAL TECHNICAL DATA

Refrigerant circuit

Size			1402	1602	1802	2002	2202	2352	2502	2652	2802	3002	3202	3402	3602	3902
Compressor																
Type	A,E,N,U	type	Screw													
Compressor regulation	A,E,N,U	type	On-Off													
Number	A,E,N,U	no.	2	2	2	2	2	2	2	2	2	2	2	2	2	2
Circuits	A,E,N,U	no.	2	2	2	2	2	2	2	2	2	2	2	2	2	2
Refrigerant	A,E,N,U	type	R134a													
Total refrigerant charge (1)	A	kg	64,00	64,00	64,00	64,00	80,00	80,00	80,00	96,00	96,00	101,00	106,00	117,00	112,00	128,00
	E,U	kg	64,00	64,00	80,00	80,00	80,00	96,00	96,00	112,00	112,00	117,00	122,00	133,00	128,00	144,00
	N	kg	80,00	80,00	96,00	96,00	96,00	112,00	112,00	128,00	128,00	133,00	138,00	149,00	160,00	176,00
Potential global heating (GWP)	A,E,N,U		1430													
Equivalent CO_2	A	tCO_2eq	91,52	91,52	91,52	91,52	114,40	114,40	114,40	137,28	137,28	144,43	151,58	167,31	160,16	183,04
	E,U	tCO_2eq	91,52	91,52	114,40	114,40	114,40	137,28	137,28	160,16	160,16	167,31	174,46	190,19	183,04	205,92
	N	tCO_2eq	114,40	114,40	137,28	137,28	137,28	160,16	160,16	183,04	183,04	190,19	197,34	213,07	228,80	251,68

(1) The load indicated in the table is an estimated and preliminary value. The final value of the refrigerant load is indicated on the unit's technical label. For further information contact the office.

Size			4202	4502	4802	5202	5602	6002	6402	6503	6703	6903	7203	8403	9603
Compressor															
Type	A,E,N,U	type	Screw												
Compressor regulation	A,E,N,U	type	On-Off												
Number	A	no.	2	2	2	2	2	2	2	3	3	3	3	3	3
	E,U	no.	2	2	2	2	2	2	2	3	3	3	3	-	-
	N	no.	2	2	2	2	2	2	2	3	-	-	-	-	-
Circuits	A	no.	2	2	2	2	2	2	2	3	3	3	3	3	3
	E,U	no.	2	2	2	2	2	2	2	3	3	3	3	-	-
	N	no.	2	2	2	2	2	2	2	3	-	-	-	-	-
Refrigerant	A,E,N,U	type	R134a												
Total refrigerant charge (1)	A	kg	128,00	144,00	144,00	144,00	160,00	176,00	176,00	192,00	192,00	224,00	224,00	240,00	272,00
	E,U	kg	160,00	160,00	176,00	176,00	192,00	208,00	224,00	224,00	240,00	240,00	256,00	-	-
	N	kg	176,00	208,00	224,00	240,00	256,00	256,00	256,00	272,00	-	-	-	-	-
Potential global heating (GWP)	A		1430												
	E,U		1430	1430	1430	1430	1430	1430	1430	1430	1430	1430	1430	-	-
	N		1430	1430	1430	1430	1430	1430	1430	1430	-	-	-	-	-
Equivalent CO_2	A	tCO_2eq	183,04	205,92	205,92	205,92	228,80	251,68	251,68	274,56	274,56	320,32	320,32	343,20	388,96
	E,U	tCO_2eq	228,80	228,80	251,68	251,68	274,56	297,44	320,32	320,32	343,20	343,20	366,08	-	-
	N	tCO_2eq	251,68	297,44	320,32	343,20	366,08	366,08	366,08	388,96	-	-	-	-	-

(1) The load indicated in the table is an estimated and preliminary value. The final value of the refrigerant load is indicated on the unit's technical label. For further information contact the office.

System side heat exchanger

Size			1402	1602	1802	2002	2202	2352	2502	2652	2802	3002	3202	3402	3602	3902
System side heat exchanger																
Type	A,E,N,U	type	Shell and tube													
Number	A,E,N,U	no.	1	1	1	1	1	1	1	1	1	1	1	1	1	1

Size			4202	4502	4802	5202	5602	6002	6402	6503	6703	6903	7203	8403	9603
System side heat exchanger															
Type	A,E,N,U	type	Shell and tube												
Number	A	no.	1	1	1	1	1	1	1	2	2	2	2	2	2
	E,U	no.	1	1	1	1	2	2	2	2	2	2	2	-	-
	N	no.	1	2	2	2	2	2	2	2	-	-	-	-	-

Size			1402	1602	1802	2002	2202	2352	2502	2652	2802	3002	3202	3402	3602	3902
Integrated hydronic kit: 00																
Hydraulic connections																
Connections (in/out)	A,E,N,U	Type	Grooved joints													
Size (in)	A	Ø	5″	5″	5″	5″	5″	5″	5″	6″	6″	6″	6″	6″	6″	6″
	E,U	Ø	5″	5″	5″	5″	5″	6″	6″	6″	6″	6″	6″	6″	6″	6″
	N	Ø	5″	5″	6″	6″	6″	6″	6″	6″	6″	6″	6″	6″	6″	6″
Size (out)	A	Ø	5″	5″	5″	5″	5″	5″	5″	6″	6″	6″	6″	6″	6″	6″
	E,U	Ø	5″	5″	5″	5″	5″	6″	6″	6″	6″	6″	6″	6″	6″	6″
	N	Ø	5″	5″	6″	6″	6″	6″	6″	6″	6″	6″	6″	6″	6″	6″

Size			4202	4502	4802	5202	5602	6002	6402	6503	6703	6903	7203	8403	9603
Integrated hydronic kit: 00															
Hydraulic connections															
Connections (in/out)	A,E,N,U	Type	Grooved joints												
Size (in)	A	Ø	6″	6″	6″	6″	6″	6″	6″	-	-	-	-	-	-
	E,U	Ø	6″	6″	6″	6″	-	-	-	-	-	-	-	-	-
	N	Ø	6″	-	-	-	-	-	-	-	-	-	-	-	-
Size (out)	A	Ø	6″	6″	6″	8″	8″	8″	8″	-	-	-	-	-	-
	E,U	Ø	6″	6″	8″	8″	-	-	-	-	-	-	-	-	-
	N	Ø	6″	-	-	-	-	-	-	-	-	-	-	-	-
Module 1															
Size (in)	A	Ø	-	-	-	-	-	-	-	6″	6″	6″	6″	6″	6″
	E,U	Ø	-	-	-	-	6″	6″	6″	6″	6″	6″	6″	-	-
	N	Ø	-	6″	6″	6″	6″	6″	6″	6″	-	-	-	-	-
Size (out)	A	Ø	-	-	-	-	-	-	-	6″	6″	6″	6″	8″	8″
	E,U	Ø	-	-	-	-	6″	6″	6″	6″	6″	6″	8″	-	-
	N	Ø	-	6″	6″	6″	6″	6″	6″	6″	-	-	-	-	-
Module 2															
Size (in)	A	Ø	-	-	-	-	-	-	-	5″	5″	5″	5″	5″	6″
	E,U	Ø	-	-	-	-	6″	6″	6″	5″	5″	5″	5″	-	-
	N	Ø	-	6″	6″	6″	6″	6″	6″	6″	-	-	-	-	-
Size (out)	A	Ø	-	-	-	-	-	-	-	5″	5″	5″	5″	5″	6″
	E,U	Ø	-	-	-	-	6″	6″	6″	5″	5″	5″	5″	-	-
	N	Ø	-	6″	6″	6″	6″	6″	6″	6″	-	-	-	-	-

Fans data

Size			1402	1602	1802	2002	2202	2352	2502	2652	2802	3002	3202	3402	3602	3902
Model: F																
Fan																
Type	A,E,N,U	type	Axial													
Number	A	no.	8	8	8	8	10	10	10	12	12	12	12	14	14	16
	E,U	no.	8	8	10	10	10	12	12	14	14	14	14	16	16	18
	N	no.	10	10	12	12	12	14	14	16	16	16	16	18	20	22
Air flow rate	A	m^3/h	116000	116000	116000	116000	145000	145000	145000	174000	174000	174000	174000	203000	203000	232000
	E	m^3/h	89600	89600	112000	112000	112000	134400	134400	156800	156800	156800	156800	179200	179200	201600
	N	m^3/h	112000	112000	134400	134400	134400	156800	156800	179200	179200	179200	179200	201600	224000	246400
	U	m^3/h	116000	116000	145000	145000	145000	174000	174000	203000	203000	203000	203000	232000	232000	261000

Size			1402	1602	1802	2002	2202	2352	2502	2652	2802	3002	3202	3402	3602	3902
Model: P																
Fan																
Type	A,E,N,U	type	Axial													
Number	A	no.	8	8	8	8	10	10	10	12	12	12	12	14	14	16
	E,U	no.	8	8	10	10	10	12	12	14	14	14	14	16	16	18
	N	no.	10	10	12	12	12	14	14	16	16	16	16	18	20	22
Air flow rate	A	m^3/h	109600	109600	109600	109600	137000	137000	137000	164400	164400	164400	164400	191800	191800	219200
	E	m^3/h	85600	85600	107000	107000	107000	128400	128400	149800	149800	149800	149800	171200	171200	192600
	N	m^3/h	107000	107000	128400	128400	128400	149800	149800	171200	171200	171200	171200	192600	214000	235400
	U	m^3/h	109600	109600	137000	137000	137000	164400	164400	191800	191800	191800	191800	219200	219200	246600

Size			4202	4502	4802	5202	5602	6002	6402	6503	6703	6903	7203	8403	9603
Model: F															
Fan															
Type	A,E,N,U	type	Axial												
Number	A	no.	16	18	18	18	20	22	22	24	24	28	28	30	34
	E,U	no.	20	20	22	22	24	26	28	28	30	30	32	-	-
	N	no.	22	26	28	30	32	32	32	34	-	-	-	-	-
Air flow rate	A	m^3/h	232000	261000	261000	261000	290000	319000	319000	348000	348000	406000	406000	435000	493000
	E	m^3/h	224000	224000	246400	246400	268800	291200	313600	313600	336000	336000	358400	-	-
	N	m^3/h	246400	291200	313600	336000	358400	358400	358400	380800	-	-	-	-	-
	U	m^3/h	290000	290000	319000	319000	348000	377000	406000	406000	435000	435000	464000	-	-

Size			4202	4502	4802	5202	5602	6002	6402	6503	6703	6903	7203	8403	9603
Model: P															
Fan															
Type	A,E,N,U	type							Axial						
Number	A	no.	16	18	18	18	20	22	22	24	24	28	28	30	34
	E,U	no.	20	20	22	22	24	26	28	28	30	30	32	-	-
	N	no.	22	26	28	30	32	32	32	34	-	-	-	-	-
Air flow rate	A	m^3/h	219200	246600	246600	246600	274000	301400	301400	328800	328800	383600	383600	411000	465800
	E	m^3/h	214000	214000	235400	235400	256800	278200	299600	299600	321000	321000	342400	-	-
	N	m^3/h	235400	278200	299600	321000	342400	342400	342400	363800	-	-	-	-	-
	U	m^3/h	274000	274000	301400	301400	328800	356200	383600	383600	411000	411000	438400	-	-

Sound data

Size			1402	1602	1802	2002	2202	2352	2502	2652	2802	3002	3202	3402	3602	3902
Sound data calculated in cooling mode (1)																
Sound power level	A	dB(A)	98,0	98,0	98,0	98,0	99,0	99,0	99,0	99,7	99,7	99,7	99,7	100,4	100,4	101,1
	E	dB(A)	91,0	91,0	91,7	91,9	92,1	92,6	92,5	93,0	93,0	93,0	93,0	93,7	93,9	94,6
	N	dB(A)	91,7	91,7	92,3	92,5	92,6	93,1	93,0	93,5	93,5	93,5	93,5	94,1	94,6	95,2
	U	dB(A)	98,0	98,0	98,9	99,0	99,0	99,7	99,7	100,4	100,4	100,4	100,4	100,9	101,0	101,5
Sound pressure level (10 m)	A	dB(A)	65,6	65,6	65,6	65,6	66,4	66,4	66,4	67,1	67,1	67,1	67,1	67,6	67,7	68,2
	E	dB(A)	58,6	58,6	59,2	59,4	59,5	59,9	59,9	60,3	60,3	60,3	60,3	60,8	61,0	61,6
	N	dB(A)	59,2	59,2	59,7	59,9	60,0	60,3	60,3	60,6	60,6	60,6	60,6	61,1	61,5	62,0
	U	dB(A)	65,6	65,6	66,4	66,4	66,4	67,1	67,1	67,6	67,6	67,6	67,6	68,1	68,1	68,5

(1) Sound power calculated on the basis of measurements made in accordance with UNI EN ISO 9614-2, as required for Eurovent certification. Sound pressure (cold functioning) measured in free field, 10m away from the unit external surface (in compliance with UNI EN ISO 3744).

Size			4202	4502	4802	5202	5602	6002	6402	6503	6703	6903	7203	8403	9603
Sound data calculated in cooling mode (1)															
Sound power level	A	dB(A)	101,1	101,6	101,6	101,6	102,1	102,5	102,5	102,7	102,8	103,4	103,4	103,7	104,2
	E	dB(A)	95,2	95,2	95,4	95,6	96,0	96,2	96,4	96,0	96,5	96,4	96,6	-	-
	N	dB(A)	95,5	96,0	96,2	96,6	96,9	96,9	96,9	96,7	-	-	-	-	-
	U	dB(A)	102,0	102,0	102,4	102,4	102,8	103,1	103,4	103,4	103,7	103,7	103,9	-	-
Sound pressure level (10 m)	A	dB(A)	68,2	68,6	68,6	68,6	69,0	69,2	69,2	69,4	69,4	69,8	69,8	70,0	70,4
	E	dB(A)	62,1	62,0	62,2	62,3	62,7	62,8	62,9	62,5	62,8	62,8	62,8	-	-
	N	dB(A)	62,3	62,5	62,6	62,9	63,1	63,1	63,1	62,8	-	-	-	-	-
	U	dB(A)	68,9	68,9	69,1	69,2	69,5	69,7	69,9	69,8	70,0	70,0	70,2	-	-

(1) Sound power calculated on the basis of measurements made in accordance with UNI EN ISO 9614-2, as required for Eurovent certification. Sound pressure (cold functioning) measured in free field, 10m away from the unit external surface (in compliance with UNI EN ISO 3744).

DIMENSIONS

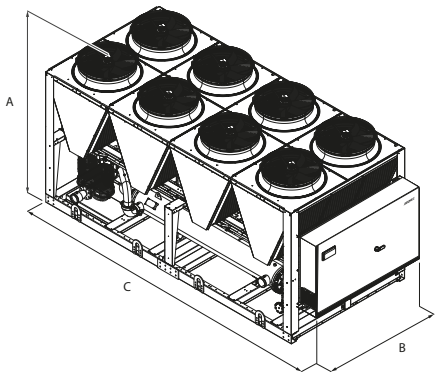

Size			1402	1602	1802	2002	2202	2352	2502	2652	2802	3002	3202	3402	3602	3902
Dimensions and weights																
A	A,E,N,U	mm	2450	2450	2450	2450	2450	2450	2450	2450	2450	2450	2450	2450	2450	2450
B	A,E,N,U	mm	2200	2200	2200	2200	2200	2200	2200	2200	2200	2200	2200	2200	2200	2200
C	A	mm	5160	5160	5160	5160	6350	6350	6350	7140	7140	7140	7140	8330	8330	9520
	E,U	mm	5160	5160	6350	6350	6350	7140	7140	8330	8330	8330	8330	9520	9520	10710
	N	mm	6350	6350	7140	7140	7140	8330	8330	9520	9520	9520	9520	10710	11900	13090

Size			4202	4502	4802	5202	5602	6002	6402	6503	6703	6903	7203	8403	9603
Dimensions and weights															
A	A	mm	2450	2450	2450	2450	2450	2450	2450	2450	2450	2450	2450	2450	2450
	E,U	mm	2450	2450	2450	2450	2450	2450	2450	2450	2450	2450	2450	-	-
	N	mm	2450	2450	2450	2450	2450	2450	2450	2450	-	-	-	-	-
B	A	mm	2200	2200	2200	2200	2200	2200	2200	2200	2200	2200	2200	2200	2200
	E,U	mm	2200	2200	2200	2200	2200	2200	2200	2200	2200	2200	2200	-	-
	N	mm	2200	2200	2200	2200	2200	2200	2200	2200	-	-	-	-	-
C	A	mm	9520	10710	10710	10710	11900	13090	13090	14280	14280	16660	16660	17850	20230
	E,U	mm	11900	11900	13090	13090	14280	15470	16660	16660	17850	17850	19040	-	-
	N	mm	13090	15470	16660	17850	19040	19040	19040	20230	-	-	-	-	-

For transport reasons, the units with the depth of more than 13090 mm are shipped separately. For more information, please refer to the technical manual and / or installation.

Size			1402	1602	1802	2002	2202	2352	2502	2652	2802	3002	3202	3402	3602	3902
Model: F																
Single module unit																
Empty weight	A	kg	4.695	4.730	4.870	5.200	6.065	6.080	6.285	6.950	7.145	7.200	7.300	8.500	8.975	9.590
	E,U	kg	4.855	4.875	5.435	6.025	6.380	7.025	7.045	7.625	7.715	7.785	7.880	9.145	9.605	10.475
	N	kg	5.370	5.390	6.065	6.655	7.010	7.560	7.585	8.175	8.265	8.340	8.430	9.930	10.905	11.630

Size			4202	4502	4802	5202	5602	6002	6402	6503	6703	6903	7203	8403	9603
Model: F															
Single module unit															
Empty weight	A	kg	9.655	10.475	10.525	10.945	11.580	12.265	12.305	-	-	-	-	-	-
	E,U	kg	11.070	11.130	12.135	12.260	-	-	-	-	-	-	-	-	-
	N	kg	11.700	-	-	-	-	-	-	-	-	-	-	-	-
Bimodule unit															
Empty weight module 1	A	kg	-	-	-	-	-	-	-	9.590	9.655	10.475	10.525	11.580	12.305
	E,U	kg	-	-	-	-	6.630	6.630	7.170	10.475	11.070	11.130	12.135	-	-
	N	kg	-	6.210	6.995	6.995	7.730	7.730	7.775	11.630	-	-	-	-	-
Empty weight module 2	A	kg	-	-	-	-	-	-	-	5.225	5.225	5.765	5.765	5.930	6.590
	E,U	kg	-	-	-	-	6.630	7.170	7.170	5.755	5.755	5.810	5.820	-	-
	N	kg	-	6.995	6.995	7.730	7.730	7.775	7.775	6.455	-	-	-	-	-

Aermec reserves the right to make any modifications deemed necessary. All data is subject to change without notice. Aermec does not assume responsibility or liability for errors or omissions.

Aermec S.p.A.
Via Roma, 996 - 37040 Bevilacqua (VR) - Italia
Tel. 0442633111 - Telefax 044293577
www.aermec.com