NSM 1402-9603

Air-water chiller

Cooling capacity 302 ÷ 2100 kW

- **Microchannel coil**
- **Night mode**
- **Operation up to 50 °C outdoor air**
- **HP floating: ESEER +5% with inverter fans**

DESCRIPTION

Air-cooled outdoor chiller designed to meet air conditioning needs in residential/commercial complexes or industrial applications.
Outdoor units with high-efficiency screw compressors axial fans, microchannel external coils and plant side shell and tube heat exchanger.
In the unit with desuperheater, it is also possible to produce free-hot water.
The base, the structure and the panels are made of galvanized steel treated with polyester paint RAL 9003.

VERSIONS

° Standard
A High efficiency
E Silenced high efficiency
L Standard silenced
N Silenced very high efficiency
U Very high efficiency

FEATURES

Operating field

Operation at full load up to 51 °C external air temperature. Unit can produce chilled water (up to -10°C of water produced in some versions).

Bi-tri circuit unit

Unit with 2/3 refrigerant circuits designed to provide maximum efficiency at full load, ensuring high efficiency at partial loads also and ensuring continuity in case one of the circuits stops.

Aluminium microchannel coils

The microchannel condensing aluminum coils ensure high levels of efficiency, reduced quantities of refrigerant and lower unit weight. The treatment "O" available as configurator it ensures high resistance to corrosion even in the most aggressive environments.

Electronic expansion valve

The possibility to use electronic expansion valve, offers significant benefits, especially when the chiller is working with partial loads, increasing the energy efficiency of the unit.

■ *As standard from size 5202÷6402 and 8403÷9603, optional for all other sizes.*

Integrated hydronic kit

Integrated hydronic kit containing the main hydraulic components; available with various configurations with one or two pumps, high or low head, to obtain a solution that allows you to save money and to facilitate installation.

CONTROL PCO_5

Units include 1 control board for each compressor.
Microprocessor control, with keyboard and LCD display, for easy access on the unit with a menu available in several languages.

— The presence of a programmable timer allows functioning time periods and a possible second set-point to be set.
— The temperature control takes place with the integral proportional logic, based on the water output temperature.
— **Floating HP control:** available for all models with inverter fans or with DCPX. Allows, with continuous fan modulation, to optimize the operation of the unit in any operating point, ensuring an increase in the energy efficiency at partial load. **ESEER up to +5% with inverter fans**
— **Night mode:** only in the **non-silenced versions with the fan to be, inverter or phase-cut or with the DCPX accessory**, a silenced operation profile can be set, which is useful, for example, at night for greater acoustic comfort, but always ensures performance even at peak load hours.
— Possibility to control two units in a Master-Slave configuration (from size 1402 to 6402)

ACCESSORIES

AER485P1: RS-485 interface for supervising systems with MODBUS protocol. 1 accessory is provided for each unit control board.
AERBAC-ONE: Ethernet communication interface for Bacnet/IP and Modbus TCP/IP protocols, HTTPS protocol for web interface, encrypted communication protocols and access credential management in accordance with the latest standards. One accessory is provided for each unit control board.
AERBACP: Ethernet communication interface for Bacnet/IP and Modbus TCP/IP protocols. 1 accessory is provided for each unit control board.
AERNET: The device remotely controls, manages and remotely monitors a chiller/heat pump using a PC, smartphone or table via a Cloud connection. AERNET acts as Master while each connected unit is configured as Slave up to a maximum of 6 control cards. The connection is made via cable and/or USB key. Wi-Fi connectivity is not available. It is also possible to save a log

file with all the data from the connected units to your terminal with a simple click for possible post-analysis. With the purchase of the Router, the Customer benefits from a 24-month free period during which he can use the Aernet Service at no additional cost. At the end of this initial period, the Service may be renewed by subscribing to a 1, 2 or 3 year subscription. For further details on costs and renewal methods, please contact our office or consult the technical documentation available on our website. www.aermec.com.

MULTICHILLER-EVO: Control, switch-on and switch-off system of the single chillers where multiple units are installed in parallel (max. no. 9), always ensuring constant flow rate to the evaporators.

PRV3: Allows you to control the chiller at a distance.

DCPX: Device for condensation temperature control, with continuous speed modulation of fans by using a pressure transducer.

AVX: Spring anti-vibration supports.

FACTORY FITTED ACCESSORIES

RIF: Power factor correction. Connected in parallel to the motor allowing about 10% reduction of input current.

GP_: Anti-intrusion grid kit

KRS: Electric heater for the heat exchanger

ACCESSORIES COMPATIBILITY

Model	Ver	1402	1602	1802	2002	2202	2352	2502	2652	2802	3002	3202	3402	3602	3902
AER485P1 x no. 2	°,A,E,L,N,U	•	•	•	•	•	•	•	•	•	•	•	•	•	•
AERBAC-ONE x no. 2	°,A,E,L,N,U	•	•	•	•	•	•	•	•	•	•	•	•	•	•
AERBACP x no. 2	°,A,E,L,N,U	•	•	•	•	•	•	•	•	•	•	•	•	•	•
AERNET	°,A,E,L,N,U	•	•	•	•	•	•	•	•	•	•	•	•	•	•
MULTICHILLER-EVO	°,A,E,L,N,U	•	•	•	•	•	•	•	•	•	•	•	•	•	•
PRV3	°,A,E,L,N,U	•	•	•	•	•	•	•	•	•	•	•	•	•	•

Model	Ver	4202	4502	4802	5202	5602	6002	6402	6503	6703	6903	7203	8403	9603
AER485P1 x no. 2	°,A,E,L,N,U	•	•	•	•	•	•	•						
AER485P1 x no. 3	°,A,L								•	•	•	•	•	•
	E,U								•	•	•	•		
	N								•					
AERBAC-ONE x no. 2	°,A,E,L,N,U	•	•	•	•	•	•	•						
AERBAC-ONE x no. 3	°,A,L								•	•	•	•	•	•
	E,U								•	•	•	•		
	N								•					
AERBACP x no. 2	°,A,E,L,N,U	•	•	•	•	•	•	•						
AERBACP x no. 3	°,A,L								•	•	•	•	•	•
	E,U								•	•	•	•		
	N								•					
AERNET	°,A,L	•	•	•	•	•	•	•	•	•	•	•	•	•
	E,U	•	•	•	•	•	•	•	•	•	•	•		
	N	•	•	•	•	•	•	•	•					
MULTICHILLER-EVO	°,A,L	•	•	•	•	•	•	•	•	•	•	•	•	•
	E,U	•	•	•	•	•	•	•	•	•	•	•		
	N	•	•	•	•	•	•	•	•					
PRV3	°,A,L	•	•	•	•	•	•	•	•	•	•	•	•	•
	E,U	•	•	•	•	•	•	•	•	•	•	•		
	N	•	•	•	•	•	•	•	•					

Ver	1402	1602	1802	2002	2202	2352	2502	2652	2802	3002
Fans: M										
°	DCPX110	DCPX110	DCPX110	DCPX110	DCPX110	DCPX110	DCPX110	DCPX111	DCPX111	DCPX112
A	DCPX111	DCPX111	DCPX111	DCPX111	DCPX112	DCPX112	DCPX112	DCPX113	DCPX113	DCPX113
E, L, N	As standard	As standard	As standard	As standard	As standard	As standard	As standard	As standard	As standard	As standard
U	DCPX111	DCPX111	DCPX112	DCPX112	DCPX113	DCPX113	DCPX114	DCPX114	DCPX114	DCPX114

Ver	3202	3402	3602	3902	4202	4502	4802	5202	5602	6002
Fans: M										
°	DCPX112	DCPX112	DCPX112	DCPX113	DCPX113	DCPX114	DCPX114	DCPX115	DCPX115	DCPX115
A	DCPX113	DCPX114	DCPX114	DCPX115	DCPX115	DCPX116	DCPX116	DCPX116	DCPX117	DCPX118
E, N	As standard	As standard	As standard	As standard	As standard	As standard	As standard	As standard	As standard	As standard
L	As standard	As standard	As standard	As standard	As standard	As standard	As standard	As standard	-	-
U	DCPX114	DCPX115	DCPX115	DCPX116	DCPX117	DCPX117	DCPX118	DCPX119	DCPX130	DCPX131

Ver	6402	6503	6703	6903	7203	8403	9603
Fans: M							
°	DCPX116	DCPX135+DCPX113	DCPX135+DCPX113	DCPX125+DCPX114	DCPX114+DCPX136	DCPX114+DCPX136	DCPX114+DCPX136
A	DCPX118	DCPX115+DCPX136	DCPX115+DCPX136	DCPX116+DCPX136	DCPX116+DCPX136	DCPX117+DCPX136	DCPX118+DCPX137
E	As standard	As standard	As standard	As standard	As standard	-	-
L	As standard	As standard	As standard	As standard	As standard	As standard	-
N	As standard	As standard	-	-	-	-	-
U	DCPX132	DCPX116+DCPX137	DCPX117+DCPX137	DCPX117+DCPX137	DCPX118+DCPX137	-	-

Antivibration

Ver	1402	1602	1802	2002	2202	2352	2502	2652	2802	3002	3202	3402	3602	3902
Integrated hydronic kit: 00, DA, DB, DC, DD, DE, DF, DG, DH, DI, DJ, PA, PB, PC, PD, PE, PF, PG, PH, PI, PJ, TF, TG, TH, TI, TJ														
°	AVX900	AVX900	AVX900	AVX904	AVX904	AVX904	AVX904	AVX904	AVX904	AVX959	AVX959	AVX960	AVX960	AVX911
A, L	AVX901	AVX901	AVX901	AVX904	AVX959	AVX959	AVX959	AVX903	AVX903	AVX903	AVX903	AVX909	AVX909	AVX907
E, U	AVX901	AVX901	AVX959	AVX959	AVX959	AVX903	AVX903	AVX906	AVX906	AVX906	AVX906	AVX907	AVX907	AVX912
N	AVX959	AVX959	AVX903	AVX903	AVX903	AVX906	AVX906	AVX907	AVX907	AVX907	AVX907	AVX912	AVX910	AVX913

Ver	4202	4502	4802	5202	5602	6002	6402	6503	6703	6903	7203	8403	9603
Integrated hydronic kit: 00, TF, TG, TH, TI, TJ													
°	AVX911	AVX909	AVX909	AVX907	AVX907	AVX907	AVX912	AVX914	AVX914	AVX915	AVX916	AVX916	AVX916
A, L	AVX907	AVX912	AVX912	AVX912	AVX910	AVX913	AVX913	AVX924	AVX924	AVX925	AVX925	AVX927	AVX926
E, U	AVX910	AVX910	AVX913	AVX913	AVX920	AVX917	AVX918	AVX925	AVX927	AVX927	AVX928	-	-
N	AVX913	AVX917	AVX918	AVX919	AVX921	AVX921	AVX921	AVX926	-	-	-	-	-
Integrated hydronic kit: DA, DB, DC, DD, DE, PA, PB, PC, PD, PE													
°	AVX911	-	-	-	-	-	-	-	-	-	-	-	-
A, L	AVX907	-	-	-	-	-	-	-	-	-	-	-	-
E, U	AVX910	-	-	-	-	-	-	-	-	-	-	-	-
N	AVX913	-	-	-	-	-	-	-	-	-	-	-	-
Integrated hydronic kit: DF, DG, DH, DI, DJ, PF, PG, PH, PI, PJ													
°	AVX911	AVX909	AVX909	AVX907	AVX907	AVX907	AVX912	-	-	-	-	-	-
A, L	AVX907	AVX912	AVX912	AVX912	AVX910	AVX913	AVX913	-	-	-	-	-	-
E, U	AVX910	AVX910	AVX913	AVX913	AVX920	AVX917	AVX918	-	-	-	-	-	-
N	AVX913	AVX917	AVX918	AVX919	AVX921	AVX921	AVX921	-	-	-	-	-	-

Power factor correction

Ver	1402	1602	1802	2002	2202	2352	2502	2652	2802
°	RIFNSM1402Q	RIFNSM1602Q	RIFNSM1802Q	RIFNSM2002Q	RIFNSM2202Q	RIFNSM2352Q	RIFNSM2502Q	RIFNSM2652Q	RIFNSM2802Q
A, L	RIFNSM1402Q	RIFNSM1602Q	RIFNSM1802Q	RIFNSM2002Q	RIFNSM2202Q	RIFNSM2352Q	RIFNSM2502Q	RIFNSM2652Q	RIFNSM2802C
E	RIFNSM1402Q	RIFNSM1602Q	RIFNSM1802Q	RIFNSM2002Q	RIFNSM2202Q	RIFNSM2352C	RIFNSM2502C	RIFNSM2652Q	RIFNSM2802C
N	RIFNSM1402Q	RIFNSM1602Q	RIFNSM1802C	RIFNSM2002Q	RIFNSM2202C	RIFNSM2352C	RIFNSM2502C	RIFNSM2652Q	RIFNSM2802C
U	RIFNSM1402Q	RIFNSM1602Q	RIFNSM1802Q	RIFNSM2002C	RIFNSM2202Q	RIFNSM2352C	RIFNSM2502C	RIFNSM2652Q	RIFNSM2802C

A grey background indicates the accessory must be assembled in the factory

Ver	3002	3202	3402	3602	3902	4202	4502	4802	5202
°	RIFNSM3002Q	RIFNSM3202Q	RIFNSM3402Q	RIFNSM3602Q	RIFNSM3902C	RIFNSM4202C	RIFNSM4502C	RIFNSM4802C	RIFNSM5202C
A, E, L, U	RIFNSM3002C	RIFNSM3202C	RIFNSM3402C	RIFNSM3602C	RIFNSM3902C	RIFNSM4202C	RIFNSM4502C	RIFNSM4802C	RIFNSM5202C
N	RIFNSM3002C	RIFNSM3202C	RIFNSM3402C	RIFNSM3602C	RIFNSM3902C	RIFNSM4202C	-	-	-

The accessory cannot be fitted on the configurations indicated with -
A grey background indicates the accessory must be assembled in the factory

Ver	5602	6002	6402	6503	6703	6903	7203	8403	9603
°, A, L	RIFNSM5602C	RIFNSM6002C	RIFNSM6402C	-	-	-	-	-	-

The accessory cannot be fitted on the configurations indicated with -
A grey background indicates the accessory must be assembled in the factory

Grids

Ver	1402	1602	1802	2002	2202	2352	2502	2652	2802
°	GP3V	GP3V	GP3V	GP4V	GP4V	GP4V	GP4V	GP4V	GP4V
A, L	GP4V	GP4V	GP4VN	GP4V	GP5V	GP5V	GP5V	GP6V	GP6V
E, U	GP4V	GP4V	GP5V	GP5V	GP5V	GP6V	GP6V	GP7V	GP7V
N	GP5V	GP5V	GP6V	GP6V	GP6V	GP7V	GP7V	GP8V	GP8V

A grey background indicates the accessory must be assembled in the factory

Ver	3002	3202	3402	3602	3902	4202	4502	4802	5202
°	GP5V	GP5V	GP5V	GP5V	GP6V	GP6V	GP7V	GP7V	GP8V
A, L	GP6V	GP6V	GP7V	GP7V	GP8V	GP8V	GP9V	GP9V	GP9V
E, U	GP7V	GP7V	GP8V	GP8V	GP9V	GP10V	GP10V	GP11V	GP11V
N	GP8V	GP8V	GP9V	GP10V	GP11V	GP11V	GP6V+GP7V	GP7V+GP7V	GP7V+GP8V

A grey background indicates the accessory must be assembled in the factory

Ver	5602	6002	6402	6503	6703	6903	7203	8403	9603
°	GP8V	GP8V	GP9V	GP9V3	GP9V3	GP10V	GP11V	GP11V	GP11V
A, L	GP11V	GP11V	GP11V	GP4V+GP8V	GP4V+GP8V	GP5V+GP9V	GP5V+GP9V	GP5V+GP10V	GP6V+GP11V
E, U	GP6V+GP6V	GP6V+GP7V	GP7V+GP7V	GP5V+GP9V	GP5V+GP10V	GP5V+GP10V	GP6V+GP11V	-	-
N	GP8V+GP8V	GP8V+GP8V	GP8V+GP8V	GP6V+GP11V	-	-	-	-	-

A grey background indicates the accessory must be assembled in the factory

Heater exchangers

Ver	1402	1602	1802	2002	2202	2352	2502	2652	2802
°, A, L	KRS22	KRS22	KRS23	KRS23	KRS23	KRS23	KRS23	KRS23	KRS23
E, N, U	KRS23	KRS23	KRS23	KRS23	KRS23	KRS23	KRS23	KRS23	KRS23

A grey background indicates the accessory must be assembled in the factory

Ver	3002	3202	3402	3602	3902	4202	4502	4802	5202
°	KRS23	KRS23	KRS23	KRS23	KRS23	KRS23	KRS23	KRS24	KRS24
A, E, L	KRS23	KRS23	KRS24	KRS24	KRS24	KRS24	KRS24	KRS24	KRS24
N	KRS23	KRS23	KRS24	KRS24	KRS24	KRS24	KRS24	KRS23+KRS23	KRS23+KRS23
U	KRS23	KRS23	KRS24	KRS24	KRS24	KRS24	KRS23+KRS23	KRS24	KRS24

A grey background indicates the accessory must be assembled in the factory

Ver	5602	6002	6402	6503	6703	6903	7203	8403	9603
°	KRS24	KRS24	KRS24	KRS24	KRS24	KRS24	KRS24	KRS24	KRS24
A, L	KRS24	KRS24	KRS24	KRS23+KRS24	KRS23+KRS24	KRS23+KRS24	KRS23+KRS24	KRS23+KRS24	KRS23+KRS24
E, U	KRS23+KRS23	KRS23+KRS23	KRS23+KRS23	KRS23+KRS24	KRS23+KRS24	KRS23+KRS24	KRS23+KRS24	-	-
N	KRS23+KRS23	KRS23+KRS23	KRS23+KRS23	KRS23+KRS24	-	-	-	-	-

A grey background indicates the accessory must be assembled in the factory

CONFIGURATOR

Field		Description
1,2,3		**NSM**
4,5,6,7		**Size** 1402, 1602, 1802, 2002, 2202, 2352, 2502, 2652, 2802, 3002, 3202, 3402, 3602, 3902, 4202, 4502, 4802, 5202, 5602, 6002, 6402, 6503, 6703, 6903, 7203, 8403, 9603
8		**Operating field**
	X	Electronic thermostatic expansion valve (1)
	Y	Low temperature mechanic thermostatic valve (2)
	Z	Low temperature electronic thermostatic valve (2)
	°	Standard mechanic thermostatic valve (3)
9		**Model**
	C	Motocondensing unit (4)
	°	Cooling only
10		**Heat recovery**
	D	With desuperheater (5)
	T	With total recovery (6)
	°	Without heat recovery
11		**Version**
	°	Standard
	A	High efficiency
	E	Silenced high efficiency
	L	Standard silenced
	N	Silenced very high efficiency
	U	Very high efficiency
12		**Coils**
	I	Copper-aluminium
	O	Coated aluminium microchannel
	R	Copper pipes-copper fins
	V	Copper pieps-Coated aluminium fins
	°	Aluminium microchannel
13		**Fans**
	J	Inverter
	M	Oversized
14		**Power supply**
	8	400V~3 50Hz with magnet circuit breakers
	°	400V~3 50Hz with fuses
15,16		**Integrated hydronic kit**

Field		Description
		Without hydronic kit
	00	Without hydronic kit
		Kit with n° 1 pump
	PA	Pump A
	PB	Pump B
	PC	Pump C
	PD	Pump D
	PE	Pump E
	PF	Pump F
	PG	Pump G
	PH	Pump H
	PI	Pump I
	PJ	Pump J
		Pump n° 1 pump + stand-by pump
	DA	Pump A + stand-by pump
	DB	Pump B + stand-by pump
	DC	Pump C + stand-by pump
	DD	Pump D + stand-by pump
	DE	Pump E + stand-by pump
	DF	Pump F + stand-by pump
	DG	Pump G + stand-by pump
	DH	Pump H + stand-by pump
	DI	Pump I + stand-by pump
	DJ	Pump J + stand-by pump
		Kit with 2 pumps
	TF	Double pump F (7)
	TG	Double pump G (7)
	TH	Double pump H (7)
	TI	Double pump I (7)
	TJ	Double pump J (7)

(1) Water produced from 4 °C ÷ 18 °C
(2) Water produced from 4 °C ÷ - 8 °C
(3) Water produced from 4 °C ÷ 15 °C
(4) The motor condensing units are not configurable with option D and T, and with the integrated hydronic kit
(5) The temperature of the water in the heat exchanger inlet must never drop below 35°C.
(6) The models 1402° - 1602° - 1802° cannot have total recovery, which is available for all the other sizes and versions. If it is necessary to have total recovery as well as the hydronic kit, feasibility must be evaluated when ordering.
(7) The unit from 5602 to 9603 can only have hydronic kit "TF - TG - TH- TI - TJ"

PERFORMANCE SPECIFICATIONS

NSM - °

Size		1402	1602	1802	2002	2202	2352	2502	2652	2802	3002	3202	3402	3602	3902
Fans: J, M															
Cooling performance 12 °C / 7 °C (1)															
Cooling capacity	kW	307,5	348,9	397,0	450,3	489,4	524,7	543,8	577,3	613,8	680,5	725,1	770,1	813,8	906,1
Input power	kW	104,8	121,0	139,0	152,8	166,4	180,6	193,9	210,5	226,5	232,7	247,5	272,1	298,3	316,2
Cooling total input current	A	181,80	207,10	228,90	256,90	281,30	306,30	329,00	356,20	380,90	392,20	413,80	446,90	483,70	520,10
EER	W/W	2,93	2,88	2,86	2,95	2,94	2,91	2,81	2,74	2,71	2,92	2,93	2,83	2,73	2,87
Water flow rate system side	l/h	52.881	59.999	68.270	77.459	84.185	90.223	93.509	99.261	105.543	117.009	124.685	132.413	139.916	155.801
Pressure drop system side	kPa	27	36	38	49	57	26	28	33	35	39	42	47	38	46

(1) Data EN 14511:2022; Heat exchanger water (services side) 12°C / 7°C; outside air 35°C

NSM °

Size		4202	4502	4802	5202	5602	6002	6402	6503	6703	6903	7203	8403	9603
Fans: J, M														
Cooling performance 12 °C / 7 °C (1)														
Cooling capacity	kW	958,5	1051,2	1099,1	1168,1	1195,0	1237,7	1327,6	1393,8	1439,8	1578,6	1669,7	1742,2	1859,9
Input power	kW	345,9	360,3	388,1	403,4	430,8	453,1	460,3	488,6	517,2	559,8	575,1	659,2	730,6
Cooling total input current	A	573,20	597,40	640,60	667,90	712,30	749,50	766,50	806,00	856,80	927,00	965,80	1.103,40	1.230,30
EER	W/W	2,77	2,92	2,83	2,90	2,77	2,73	2,88	2,85	2,78	2,82	2,90	2,64	2,55
Water flow rate system side	l/h	164.794	180.726	188.953	200.816	205.451	212.795	228.246	239.604	247.511	271.348	287.011	299.461	319.697
Pressure drop system side	kPa	41	48	42	46	48	55	62	44	46	30	33	36	40

(1) Data EN 14511:2022; Heat exchanger water (services side) 12°C / 7°C; outside air 35°C

NSM - L

Size		1402	1602	1802	2002	2202	2352	2502	2652	2802	3002	3202	3402	3602	3902
Fans: J, M															
Cooling performance 12 °C / 7 °C (1)															
Cooling capacity	kW	302,4	344,0	392,7	428,1	490,9	513,8	537,4	583,4	602,8	664,4	709,1	771,0	826,1	908,8
Input power	kW	102,7	117,2	135,7	155,9	167,8	179,4	192,5	202,9	215,3	238,3	261,2	265,4	296,6	316,1
Cooling total input current	A	172,90	195,50	218,30	253,90	277,00	297,10	318,70	335,90	354,30	391,30	426,40	428,50	472,70	509,20
EER	W/W	2,94	2,94	2,89	2,75	2,93	2,86	2,79	2,88	2,80	2,79	2,72	2,91	2,79	2,88
Water flow rate system side	l/h	52.016	59.162	67.531	73.600	84.402	88.342	92.402	100.313	103.652	114.244	121.903	132.545	142.018	156.242
Pressure drop system side	kPa	27	36	38	18	24	25	28	33	31	36	23	23	25	32

(1) Data EN 14511:2022; Heat exchanger water (services side) 12°C / 7°C; outside air 35°C

NSM - L

Size		4202	4502	4802	5202	5602	6002	6402	6503	6703	6903	7203	8403	9603
Fans: J, M														
Cooling performance 12 °C / 7 °C (1)														
Cooling capacity	kW	949,7	1032,5	1076,9	1122,7	1183,7	1254,5	1295,6	1395,1	1436,6	1605,1	1649,4	1758,0	1946,7
Input power	kW	348,7	365,9	395,0	428,8	442,3	453,2	476,4	491,5	523,6	556,9	586,7	660,2	713,5
Cooling total input current	A	566,70	592,60	637,60	693,10	715,70	736,00	776,10	792,60	849,30	914,00	959,80	1.067,30	1.163,20
EER	W/W	2,72	2,82	2,73	2,62	2,68	2,77	2,72	2,84	2,74	2,88	2,81	2,66	2,73
Water flow rate system side	l/h	163.268	177.512	185.148	193.004	203.496	215.669	222.723	239.820	246.956	275.911	283.536	302.181	334.622
Pressure drop system side	kPa	34	44	46	33	36	42	45	33	34	45	47	34	45

(1) Data EN 14511:2022; Heat exchanger water (services side) 12°C / 7°C; outside air 35°C

NSM - A

Size		1402	1602	1802	2002	2202	2352	2502	2652	2802	3002	3202	3402	3602	3902
Fans: J, M															
Cooling performance 12 °C / 7 °C (1)															
Cooling capacity	kW	315,6	360,2	415,2	461,4	509,5	544,9	576,9	620,9	658,9	699,4	741,7	800,6	884,3	955,2
Input power	kW	99,0	113,7	133,7	148,3	161,8	173,6	183,3	197,5	208,3	223,6	237,4	253,4	281,2	303,8
Cooling total input current	A	174,80	197,80	223,20	249,90	277,60	298,20	314,30	339,50	355,20	377,90	398,80	421,10	459,10	502,50
EER	W/W	3,19	3,17	3,11	3,11	3,15	3,14	3,15	3,14	3,16	3,13	3,12	3,16	3,15	3,14
Water flow rate system side	l/h	54.280	61.954	71.417	79.331	87.600	93.687	99.196	106.766	113.293	120.259	127.516	137.633	152.015	164.211
Pressure drop system side	kPa	30	39	43	21	26	28	32	37	37	40	25	25	29	36

(1) Data EN 14511:2022; Heat exchanger water (services side) 12°C / 7°C; outside air 35°C

NSM - (A)

Size		4202	4502	4802	5202	5602	6002	6402	6503	6703	6903	7203	8403	9603
Fans: J, M														
Cooling performance 12 °C / 7 °C (1)														
Cooling capacity	kW	1021,7	1084,5	1160,1	1213,2	1275,8	1352,3	1402,7	1462,2	1531,9	1682,9	1753,4	1908,6	2106,4
Input power	kW	328,5	347,0	371,7	389,2	410,5	432,6	451,5	466,3	493,4	534,6	560,2	614,3	673,3
Cooling total input current	A	547,50	576,60	613,80	647,20	684,70	725,10	758,30	772,30	821,20	897,40	936,00	1.017,20	1.131,60
EER	W/W	3,11	3,13	3,12	3,12	3,11	3,13	3,11	3,14	3,10	3,15	3,13	3,11	3,13
Water flow rate system side	l/h	175.657	186.457	199.460	208.561	219.327	232.478	241.144	251.345	263.330	289.291	301.409	328.062	362.058
Pressure drop system side	kPa	39	49	53	38	42	49	52	36	39	49	53	41	52

(1) Data EN 14511:2022; Heat exchanger water (services side) 12°C / 7°C; outside air 35°C

NSM - E

Size		1402	1602	1802	2002	2202	2352	2502	2652	2802	3002	3202	3402	3602	3902
Fans: J, M															
Cooling performance 12 °C / 7 °C (1)															
Cooling capacity	kW	319,6	368,5	417,6	472,4	514,2	543,2	579,6	615,2	652,1	695,4	740,6	796,5	881,6	951,8
Input power	kW	101,7	117,4	132,3	150,0	165,4	173,7	186,0	194,8	210,1	224,0	238,6	255,4	283,8	305,7
Cooling total input current	A	170,80	195,70	214,00	244,90	272,30	288,00	309,00	323,50	347,40	367,40	388,90	411,00	450,20	490,40
EER	W/W	3,14	3,14	3,16	3,15	3,11	3,13	3,12	3,16	3,10	3,11	3,10	3,12	3,11	3,11
Water flow rate system side	l/h	54.958	63.367	71.800	81.228	88.406	93.396	99.657	105.762	112.115	119.555	127.316	136.926	151.562	163.628
Pressure drop system side	kPa	15	14	18	21	24	26	30	24	26	29	26	25	29	36

(1) Data EN 14511:2022; Heat exchanger water (services side) 12°C / 7°C; outside air 35°C

NSM - E

Size		4202	4502	4802	5202	5602	6002	6402	6503	6703	6903	7203	8403	9603
Fans: J, M														
Cooling performance 12 °C / 7 °C (1)														
Cooling capacity	kW	1018,9	1082,1	1159,1	1206,7	1265,2	1322,0	1389,6	1464,9	1528,1	1670,1	1752,6	-	-
Input power	kW	325,9	347,4	370,9	387,8	405,6	422,2	443,7	469,4	489,0	534,5	563,0	-	-
Cooling total input current	A	528,60	560,00	597,80	627,80	655,70	686,10	723,80	764,10	791,80	861,00	898,20	-	-
EER	W/W	3,13	3,11	3,13	3,11	3,12	3,13	3,13	3,12	3,13	3,12	3,11	-	-
Water flow rate system side	l/h	175.173	186.051	199.271	207.449	217.481	227.238	238.869	251.810	262.683	287.098	301.260	-	-
Pressure drop system side	kPa	40	49	36	38	24	24	29	35	40	49	45	-	-

(1) Data EN 14511:2022; Heat exchanger water (services side) 12°C / 7°C; outside air 35°C

NSM - U

Size		1402	1602	1802	2002	2202	2352	2502	2652	2802	3002	3202	3402	3602	3902
Fans: J, M															
Cooling performance 12 °C / 7 °C (1)															
Cooling capacity	kW	331,0	378,1	432,1	481,7	527,6	564,7	590,5	635,0	675,3	708,2	750,8	811,2	902,5	975,6
Input power	kW	98,6	113,5	128,9	145,7	161,0	169,2	178,4	190,3	204,2	214,1	228,0	245,2	273,3	294,9
Cooling total input current	A	173,50	197,40	218,20	247,80	275,30	292,40	308,60	329,90	351,60	365,60	386,50	409,80	448,30	490,10
EER	W/W	3,36	3,33	3,35	3,31	3,28	3,34	3,31	3,34	3,31	3,31	3,29	3,31	3,30	3,31
Water flow rate system side	l/h	56.933	65.026	74.302	82.821	90.716	97.089	101.524	109.164	116.096	121.764	129.073	139.455	155.146	167.724
Pressure drop system side	kPa	17	15	19	21	25	28	31	25	28	30	26	26	30	37

(1) Data EN 14511:2022; Heat exchanger water (services side) 12°C / 7°C; outside air 35°C

NSM - U

Size		4202	4502	4802	5202	5602	6002	6402	6503	6703	6903	7203	8403	9603
Fans: J, M														
Cooling performance 12 °C / 7 °C (1)														
Cooling capacity	kW	1043,4	1104,7	1184,6	1234,0	1301,2	1360,8	1419,5	1505,6	1579,3	1693,4	1772,6	-	-
Input power	kW	315,2	336,8	357,4	380,5	400,8	418,5	427,8	453,3	472,9	522,1	540,7	-	-
Cooling total input current	A	530,50	562,00	596,70	633,90	671,00	705,50	725,30	762,20	795,00	870,20	895,80	-	-
EER	W/W	3,31	3,28	3,31	3,24	3,25	3,25	3,32	3,32	3,34	3,24	3,28	-	-
Water flow rate system side	l/h	179.384	189.926	203.652	212.142	223.669	233.910	244.004	258.808	271.482	291.091	304.708	-	-
Pressure drop system side	kPa	42	51	38	40	26	26	31	37	42	51	46	-	-

(1) Data EN 14511:2022; Heat exchanger water (services side) 12°C / 7°C; outside air 35°C

NSM - N

Size		1402	1602	1802	2002	2202	2352	2502	2652	2802	3002	3202	3402	3602	3902
Fans: J, M															
Cooling performance 12 °C / 7 °C (1)															
Cooling capacity	kW	329,8	375,3	431,9	474,4	517,0	550,9	578,6	620,4	659,2	701,2	743,2	803,1	879,6	955,4
Input power	kW	98,1	113,1	127,6	144,8	160,4	168,7	178,2	190,1	204,5	217,3	231,1	247,6	270,2	292,6
Cooling total input current	A	165,40	189,60	206,90	237,10	265,20	280,60	297,20	316,60	339,00	357,70	378,20	398,80	428,90	470,10
EER	W/W	3,36	3,32	3,38	3,28	3,22	3,27	3,25	3,26	3,22	3,23	3,22	3,24	3,26	3,27
Water flow rate system side	l/h	56.717	64.546	74.260	81.573	88.881	94.723	99.476	106.664	113.329	120.551	127.777	138.054	151.226	164.260
Pressure drop system side	kPa	16	15	19	21	24	28	30	25	27	29	26	25	30	37

(1) Data EN 14511:2022; Heat exchanger water (services side) 12°C / 7°C; outside air 35°C

NSM - N

Size		4202	4502	4802	5202	5602	6002	6402	6503	6703	6903	7203	8403	9603
Fans: J, M														
Cooling performance 12 °C / 7 °C (1)														
Cooling capacity	kW	1014,4	1086,1	1169,7	1219,0	1267,1	1317,0	1367,2	1452,6	-	-	-	-	-
Input power	kW	315,6	332,8	352,6	374,6	396,5	410,4	428,2	450,1	-	-	-	-	-
Cooling total input current	A	512,50	539,50	568,70	604,50	642,80	668,40	699,90	730,80	-	-	-	-	-
EER	W/W	3,21	3,26	3,32	3,25	3,20	3,21	3,19	3,23	-	-	-	-	-
Water flow rate system side	l/h	174.394	186.718	201.086	209.575	217.799	226.384	235.022	249.705	-	-	-	-	-
Pressure drop system side	kPa	40	35	44	44	26	26	30	37	-	-	-	-	-

(1) Data EN 14511:2022; Heat exchanger water (services side) 12°C / 7°C; outside air 35°C

ENERGY INDICES (REG. 2016/2281 EU)

Increased fan

Size			1402	1602	1802	2002	2202	2352	2502	2652	2802	3002	3202	3402	3602	3902
Fans: M																
SEPR - (EN 14825: 2018)																
SEPR	°	W/W	5,41	5,44	5,37	5,53	5,54	5,51	5,54	5,51	5,53	5,51	5,51	5,52	5,52	5,53
	A	W/W	5,70	5,67	5,57	5,54	5,61	5,60	5,62	5,62	5,65	5,51	5,52	5,53	5,60	5,61
	E	W/W	5,82	5,76	5,80	5,71	5,66	5,79	5,74	5,77	5,73	5,64	5,60	5,63	5,72	5,74
	L	W/W	5,62	5,59	5,48	5,54	5,53	5,52	5,56	5,54	5,60	5,52	5,52	5,52	5,55	5,54
	N	W/W	5,94	5,85	5,98	5,79	5,70	5,78	5,75	5,77	5,70	5,63	5,57	5,65	5,73	5,74
	U	W/W	5,91	5,85	5,89	5,81	5,77	5,88	5,84	5,87	5,83	5,75	5,68	5,74	5,82	5,84
Water Regulation (1)	°,A,E,L,N,U	type	FW/FO	FW/FO	FW/FO	FW/FO	FW/FO	FW/FO	FW/FO	FW/FO	FW/FO	FW/FO	FW/FO	FW/FO	FW/FO	FW/FO

(1) VW/VO - variable water flow rate/variable outlet temperature; FW/VO - fixed water flow rate/variable outlet temperature; VW/FO - variable water flow rate/fixed outlet temperature; FW/FO - fixed water flow rate/fixed outlet temperature.

Size			4802	5202	5602	6002	6402	6503	6703	6903	7203
Fans: M											
SEPR - (EN 14825: 2018)											
SEPR	°	W/W	5,53	5,52	5,53	5,52	5,52	5,64	5,51	5,54	5,55
	A	W/W	5,60	5,57	5,60	5,60	5,57	5,66	5,61	5,71	5,69
	E	W/W	5,75	5,62	5,60	5,60	5,74	5,85	5,90	5,70	5,77
	L	W/W	5,55	5,54	5,56	5,55	5,52	5,64	5,61	5,68	5,66
	N	W/W	5,73	5,79	5,65	5,67	5,65	5,79	-	-	-
	U	W/W	5,85	5,73	5,71	5,72	5,84	5,93	5,98	5,82	5,87
Water Regulation (1)	°,A,E,L,U	type	FW/FO	FW/FO	FW/FO	FW/FO	FW/FO	FW/FO	FW/FO	FW/FO	FW/FO
	N	type	FW/FO	FW/FO	FW/FO	FW/FO	FW/FO	FW/FO	-	-	-

(1) VW/VO - variable water flow rate/variable outlet temperature; FW/VO - fixed water flow rate/variable outlet temperature; VW/FO - variable water flow rate/fixed outlet temperature; FW/FO - fixed water flow rate/fixed outlet temperature.

Inverter fan

Size			1402	1602	1802	2002	2202	2352	2502	2652	2802	3002	3202	3402	3602	3902
Fans: J																
SEER - 12/7 (EN14825: 2018)																
SEER	°	W/W	- (1)	- (1)	- (1)	- (1)	- (1)	- (1)	- (1)	- (1)	- (1)	- (1)	- (1)	- (1)	- (1)	- (1)
	A	W/W	4,44	4,40	4,55	4,56	4,56	4,56	4,57	4,55	4,56	4,56	4,57	4,57	4,56	4,56
	E	W/W	4,48	4,47	4,57	4,57	4,58	4,58	4,58	4,58	4,58	4,59	4,59	4,59	4,59	4,60
	L	W/W	4,43	4,39	4,53	4,55	4,56	4,56	4,56	4,55	4,56	4,56	4,56	4,56	4,56	4,56
	N	W/W	4,54	4,51	4,60	4,60	4,61	4,59	4,60	4,61	4,60	4,61	4,60	4,60	4,60	4,60
	U	W/W	4,49	4,48	4,57	4,59	4,60	4,59	4,59	4,59	4,59	4,59	4,59	4,59	4,59	4,60
Seasonal efficiency	°	%	- (1)	- (1)	- (1)	- (1)	- (1)	- (1)	- (1)	- (1)	- (1)	- (1)	- (1)	- (1)	- (1)	- (1)
	A	%	174,50	172,80	179,00	179,20	179,40	179,40	179,70	179,10	179,50	179,50	179,70	179,60	179,50	179,40
	E	%	176,30	175,60	179,60	179,80	180,20	180,00	180,10	180,00	180,20	180,60	180,40	180,40	180,50	180,80
	L	%	174,00	172,40	178,30	179,00	179,30	179,20	179,20	179,00	179,40	179,20	179,30	179,30	179,30	179,20
	N	%	178,70	177,40	180,80	180,90	181,30	180,70	180,90	181,20	180,90	181,30	181,10	181,10	181,00	181,10
	U	%	176,60	176,10	179,80	180,40	180,90	180,50	180,70	180,60	180,70	180,60	180,60	180,40	180,50	180,90
Water Regulation (2)	°	type	-	-	-	-	-	-	-	-	-	-	-	-	-	-
	A,E,L,N,U	type	FW/VO	FW/VO	FW/VO	FW/VO	FW/VO	FW/VO	FW/VO	FW/VO	FW/VO	FW/VO	FW/VO	FW/VO	FW/VO	FW/VO
SEPR - (EN 14825: 2018)																
SEPR	°	W/W	5,41	5,44	5,37	5,53	5,54	5,51	5,54	5,51	5,53	5,51	5,51	5,52	5,52	5,53
	A	W/W	5,70	5,70	5,60	5,50	5,60	5,60	5,60	5,60	5,70	5,50	5,50	5,50	5,60	5,60
	E	W/W	5,80	5,80	5,80	5,70	5,70	5,80	5,70	5,80	5,70	5,60	5,60	5,60	5,70	5,70
	L	W/W	5,60	5,60	5,50	5,50	5,50	5,50	5,60	5,50	5,60	5,50	5,50	5,50	5,60	5,50
	N	W/W	5,90	5,90	6,00	5,80	5,70	5,80	5,80	5,80	5,70	5,60	5,60	5,70	5,70	5,70
	U	W/W	5,90	5,90	5,90	5,80	5,80	5,90	5,80	5,90	5,80	5,80	5,70	5,70	5,80	5,80
Water Regulation (2)	°,A,E,L,N,U	type	FW/FO	FW/FO	FW/FO	FW/FO	FW/FO	FW/FO	FW/FO	FW/FO	FW/FO	FW/FO	FW/FO	FW/FO	FW/FO	FW/FO

(1) Non-compliant with 2016/2281 EU regulation for comfort applications 12°C / 7°C
(2) VW/VO - variable water flow rate/variable outlet temperature; FW/VO - fixed water flow rate/variable outlet temperature; VW/FO - variable water flow rate/fixed outlet temperature; FW/FO - fixed water flow rate/fixed outlet temperature.

Size			4202	4502	4802	5202	5602	6002	6402	6503	6703	6903	7203	8403	9603
Fans: J															
SEER - 12/7 (EN14825: 2018)															
SEER	°	W/W	- (1)	- (1)	- (1)	- (1)	- (1)	- (1)	- (1)	- (1)	- (1)	- (1)	- (1)	- (1)	- (1)
	A	W/W	4,56	4,56	4,56	4,55	4,57	4,56	4,56	4,56	4,57	4,56	4,56	4,56	4,57
	E	W/W	4,58	4,59	4,59	4,59	4,59	4,59	4,59	4,59	4,60	4,58	4,59	-	-
	L	W/W	4,55	4,56	4,55	4,56	4,56	4,57	4,56	4,57	4,56	4,56	4,56	4,56	4,56
	N	W/W	4,60	4,60	4,60	4,60	4,60	4,61	4,60	4,61	-	-	-	-	-
	U	W/W	4,59	4,59	4,60	4,60	4,60	4,60	4,59	4,60	4,60	4,59	4,59	-	-
Seasonal efficiency	°	%	- (1)	- (1)	- (1)	- (1)	- (1)	- (1)	- (1)	- (1)	- (1)	- (1)	- (1)	- (1)	- (1)
	A	%	179,50	179,40	179,40	179,10	179,80	179,40	179,40	179,20	179,60	179,20	179,40	179,50	179,70
	E	%	180,30	180,60	180,70	180,60	180,40	180,40	180,60	180,50	180,90	180,20	180,40	-	-
	L	%	179,00	179,20	179,10	179,20	179,40	179,60	179,40	179,60	179,30	179,20	179,50	179,40	179,50
	N	%	180,80	181,00	181,10	181,00	181,10	181,20	180,80	181,40	-	-	-	-	-
	U	%	180,40	180,60	180,80	180,90	180,90	180,80	180,60	180,80	180,90	180,60	180,60	-	-
Water Regulation (2)	°	type	-	-	-	-	-	-	-	-	-	-	-	-	-
	A,L	type	FW/VO	FW/VO	FW/VO	FW/VO	FW/VO	FW/VO	FW/VO	FW/VO	FW/VO	FW/VO	FW/VO	FW/VO	FW/VO
	E,U	type	FW/VO	FW/VO	FW/VO	FW/VO	FW/VO	FW/VO	FW/VO	FW/VO	FW/VO	FW/VO	FW/VO	-	-
	N	type	FW/VO	FW/VO	FW/VO	FW/VO	FW/VO	FW/VO	FW/VO	FW/VO	-	-	-	-	-
SEPR - (EN 14825: 2018)															
SEPR	°	W/W	5,51	5,52	5,53	5,52	5,53	5,52	5,52	5,64	5,51	5,54	5,55	5,51	5,54
	A	W/W	5,60	5,60	5,60	5,60	5,60	5,60	5,60	5,70	5,60	5,70	5,70	5,60	5,70
	E	W/W	5,80	5,70	5,80	5,60	5,60	5,60	5,70	5,90	5,90	5,70	5,80	-	-
	L	W/W	5,50	5,50	5,60	5,50	5,60	5,60	5,50	5,60	5,60	5,70	5,70	5,60	5,70
	N	W/W	5,70	5,70	5,70	5,80	5,70	5,70	5,70	5,80	-	-	-	-	-
	U	W/W	5,90	5,80	5,90	5,70	5,70	5,70	5,80	5,90	6,00	5,80	5,90	-	-
Water Regulation (2)	°,A,E,L,N,U	type	FW/FO	FW/FO	FW/FO	FW/FO	FW/FO	FW/FO	FW/FO	FW/FO	FW/FO	FW/FO	FW/FO	FW/FO	FW/FO

(1) Non-compliant with 2016/2281 EU regulation for comfort applications 12°C / 7°C
(2) VW/VO - variable water flow rate/variable outlet temperature; FW/VO - fixed water flow rate/variable outlet temperature; VW/FO - variable water flow rate/fixed outlet temperature; FW/FO - fixed water flow rate/fixed outlet temperature.

ELECTRIC DATA

Size			1402	1602	1802	2002	2202	2352	2502	2652	2802	3002	3202	3402	3602	3902
Electric data																
Maximum current (FLA)	°	A	229,0	257,0	284,0	324,0	357,0	379,0	400,0	433,0	458,0	466,0	466,0	514,0	562,0	619,0
	A,L	A	235,0	263,0	291,0	324,0	364,0	385,0	406,0	437,0	462,0	462,0	462,0	516,0	564,0	619,0
	E,U	A	235,0	263,0	297,0	330,0	364,0	391,0	413,0	444,0	468,0	468,0	468,0	523,0	571,0	625,0
	N	A	242,0	270,0	303,0	337,0	370,0	398,0	419,0	450,0	475,0	475,0	475,0	529,0	583,0	644,0
Peak current (LRA)	°	A	251,0	292,0	335,0	380,0	403,0	450,0	467,0	502,0	512,0	521,0	521,0	645,0	685,0	814,0
	A,L	A	257,0	299,0	342,0	380,0	409,0	456,0	473,0	507,0	517,0	517,0	517,0	647,0	687,0	814,0
	E,U	A	257,0	299,0	348,0	386,0	409,0	462,0	480,0	513,0	523,0	523,0	523,0	653,0	693,0	821,0
	N	A	263,0	305,0	354,0	392,0	415,0	469,0	486,0	519,0	529,0	529,0	529,0	660,0	706,0	839,0

Size			4202	4502	4802	5202	5602	6002	6402	6503	6703	6903	7203	8403	9603
Electric data															
Maximum current (FLA)	°	A	667,0	714,0	753,0	805,0	848,0	882,0	924,0	949,0	997,0	1.084,0	1.137,0	1.266,0	1.368,0
	A,L	A	667,0	712,0	751,0	813,0	865,0	913,0	947,0	955,0	1.003,0	1.094,0	1.133,0	1.268,0	1.406,0
	E,U	A	679,0	718,0	770,0	813,0	862,0	902,0	943,0	968,0	1.022,0	1.100,0	1.145,0	-	-
	N	A	692,0	743,0	789,0	838,0	887,0	921,0	955,0	987,0	-	-	-	-	-
Peak current (LRA)	°	A	841,0	914,0	936,0	1.100,0	1.147,0	1.259,0	1.264,0	1.038,0	1.065,0	1.160,0	1.197,0	1.446,0	1.552,0
	A,L	A	841,0	911,0	934,0	1.108,0	1.164,0	1.290,0	1.287,0	1.044,0	1.071,0	1.170,0	1.193,0	1.448,0	1.590,0
	E,U	A	854,0	918,0	953,0	1.108,0	1.161,0	1.279,0	1.283,0	1.056,0	1.090,0	1.176,0	1.205,0	-	-
	N	A	866,0	943,0	972,0	1.133,0	1.186,0	1.298,0	1.295,0	1.076,0	-	-	-	-	-

GENERAL TECHNICAL DATA

Refrigerant circuit

Size			1402	1602	1802	2002	2202	2352	2502	2652	2802
Fans: J, M											
Compressor											
Type	°,A,E,L,N,U	type					Screw				
Number	°,A,E,L,N,U	no.	2	2	2	2	2	2	2	2	2
Circuits	°,A,E,L,N,U	no.	2	2	2	2	2	2	2	2	2
Refrigerant	°,A,E,L,N,U	type					R134a				
Total refrigerant charge (1)	°	kg	48,00	49,00	49,00	71,00	63,00	73,00	72,00	72,50	71,50
	A	kg	54,50	68,00	57,50	64,00	68,00	84,00	79,00	85,50	92,50
	E	kg	58,00	61,50	82,00	87,00	92,00	88,00	87,00	98,00	98,00
	L	kg	51,00	68,00	74,00	64,00	68,00	75,00	79,00	83,00	88,00
	N	kg	72,00	76,00	88,00	93,00	98,00	109,00	112,00	124,00	128,00
	U	kg	64,00	68,00	70,00	76,50	92,00	102,00	103,00	98,00	93,50
Potential global heating (GWP)	°,A,E,L,N,U						1430				
Equivalent CO_2	°	tCO_2eq	68,64	70,07	70,07	101,53	90,09	104,39	102,96	103,68	102,25
	A	tCO_2eq	77,94	97,24	82,23	91,52	97,24	120,12	112,97	122,27	132,28
	E	tCO_2eq	82,94	87,95	117,26	124,41	131,56	125,84	124,41	140,14	140,14
	L	tCO_2eq	72,93	97,24	105,82	91,52	97,24	107,25	112,97	118,69	125,84
	N	tCO_2eq	102,96	108,68	125,84	132,99	140,14	155,87	160,16	177,32	183,04
	U	tCO_2eq	91,52	97,24	100,10	109,40	131,56	145,86	147,29	140,14	133,71

(1) The load indicated in the table is an estimated and preliminary value. The final value of the refrigerant load is indicated on the unit's technical label. For further information contact the office.

Size			3002	3202	3402	3602	3902	4202	4502	4802	5202
Fans: J, M											
Compressor											
Type	°,A,E,L,N,U	type					Screw				
Number	°,A,E,L,N,U	no.	2	2	2	2	2	2	2	2	2
Circuits	°,A,E,L,N,U	no.	2	2	2	2	2	2	2	2	2
Refrigerant	°,A,E,L,N,U	type					R134a				
Total refrigerant charge (1)	°	kg	90,00	94,00	88,50	90,50	110,00	111,00	119,00	119,00	133,00
	A	kg	96,00	97,00	107,00	115,00	155,00	132,00	145,00	145,00	152,00
	E	kg	98,00	116,00	113,00	148,00	137,00	155,00	185,00	170,00	210,00
	L	kg	96,00	97,00	107,00	112,00	128,00	132,00	146,00	145,00	152,00
	N	kg	133,00	112,00	149,00	162,00	177,00	184,00	206,00	220,00	238,00
	U	kg	125,00	113,50	120,00	121,00	137,00	155,00	185,00	170,00	188,00
Potential global heating (GWP)	°,A,E,L,N,U						1430				
Equivalent CO_2	°	tCO_2eq	128,70	134,42	126,56	129,42	157,30	158,73	170,17	170,17	190,19
	A	tCO_2eq	137,28	138,71	153,01	164,45	221,65	188,76	207,35	207,35	217,36
	E	tCO_2eq	140,14	165,88	161,59	211,64	195,91	221,65	264,55	243,10	300,30
	L	tCO_2eq	137,28	138,71	153,01	160,16	183,04	188,76	208,78	207,35	217,36
	N	tCO_2eq	190,19	160,16	213,07	231,66	253,11	263,12	294,58	314,60	340,34
	U	tCO_2eq	178,75	162,31	171,60	173,03	195,91	221,65	264,55	243,10	268,84

(1) The load indicated in the table is an estimated and preliminary value. The final value of the refrigerant load is indicated on the unit's technical label. For further information contact the office.

Size			5602	6002	6402	6503	6703	6903	7203	8403	9603
Fans: J, M											
Compressor											
Type	°,A,E,L,N,U	type					Screw				
Number	°,A,E,L,N,U	no.	2	2	2	3	3	3	3	3	3
Circuits	°,A,E,L,N,U	no.	2	2	2	3	3	3	3	3	3
Refrigerant	°,A,E,L,N,U	type					R134a				
Total refrigerant charge (1)	°	kg	136,00	135,00	150,00	215,00	181,00	248,00	212,00	297,00	336,00
	A,L	kg	212,00	181,00	181,00	236,00	243,00	269,00	220,00	318,00	260,00
	E,U	kg	226,00	184,00	192,00	247,00	267,00	281,00	300,00	-	-
	N	kg	256,00	266,00	276,00	269,00	-	-	-	-	-
Potential global heating (GWP)	°,A,E,L,N,U						1430				
Equivalent CO_2	°	tCO_2eq	194,48	193,05	214,50	307,45	258,83	354,64	303,16	424,71	480,48
	A,L	tCO_2eq	303,16	258,83	258,83	337,48	347,49	384,67	314,60	454,74	371,80
	E,U	tCO_2eq	323,18	263,12	274,56	353,21	381,81	401,83	429,00	-	-
	N	tCO_2eq	366,08	380,38	394,68	384,67	-	-	-	-	-

(1) The load indicated in the table is an estimated and preliminary value. The final value of the refrigerant load is indicated on the unit's technical label. For further information contact the office.

System side heat exchanger

Size			1402	1602	1802	2002	2202	2352	2502	2652	2802
System side heat exchanger											
Type	°,A,E,L,N,U	type					Shell and tube				
Number	°,A,E,L,N,U	no.	1	1	1	1	1	1	1	1	1

Size			3002	3202	3402	3602	3902	4202	4502	4802	5202
System side heat exchanger											
Type	°,A,E,L,N,U	type					Shell and tube				
Number	°,A,E,L,U	no.	1	1	1	1	1	1	1	1	1
	N	no.	1	1	1	1	1	1	2	2	2

Size			5602	6002	6402	6503	6703	6903	7203	8403	9603
System side heat exchanger											
Type	°,A,E,L,N,U	type					Shell and tube				
Number	°	no.	1	1	1	1	1	1	1	1	1
	A,L	no.	1	1	1	2	2	2	2	2	2
	E,U	no.	2	2	2	2	2	2	2	-	-
	N	no.	2	2	2	2	-	-	-	-	-

FANS DATA

Oversized

Size			1402	1602	1802	2002	2202	2352	2502	2652	2802
Fans: M											
Increased fan											
Type	°,A,E,L,N,U	type					axials				
Fan motor	°,A,U	type					Asynchronous				
	E,L,N	type					Asynchronous with phase cut				
Fan											
Number	°	no.	6	6	6	8	8	8	8	8	8
	A,L	no.	8	8	8	8	10	10	10	12	12
	E,U	no.	8	8	10	10	10	12	12	14	14
	N	no.	10	10	12	12	12	14	14	16	16
With static pressure											
Air flow rate	°	m^3/h	96000	96000	96000	128000	128000	128000	128000	144000	144000
	A	m^3/h	128000	128000	128000	128000	160000	160000	160000	192000	192000
	E	m^3/h	92000	92000	115000	115000	115000	138000	138000	161000	161000
	L	m^3/h	92000	92000	92000	92000	115000	115000	115000	138000	138000
	N	m^3/h	115000	115000	138000	138000	138000	161000	161000	184000	184000
	U	m^3/h	128000	128000	160000	160000	160000	192000	192000	224000	224000
High static pressure	°	Pa	50	50	50	50	50	50	50	-	-
	A,E,L,N,U	Pa	50	50	50	50	50	50	50	50	50
Without Static pressure											
Air flow rate	°	m^3/h	108000	108000	108000	144000	144000	144000	144000	144000	144000
	A	m^3/h	144000	144000	144000	144000	180000	180000	180000	216000	216000
	E	m^3/h	92000	92000	115000	115000	115000	138000	138000	161000	161000
	L	m^3/h	92000	92000	92000	92000	115000	115000	115000	138000	138000
	N	m^3/h	115000	115000	138000	138000	138000	161000	161000	184000	184000
	U	m^3/h	144000	144000	180000	180000	180000	216000	216000	252000	252000
High static pressure	°,A,E,L,N,U	Pa	0	0	0	0	0	0	0	0	0

Size			1402	1602	1802	2002	2202	2352	2502	2652	2802
With static pressure											
Sound power level	°	dB(A)	96,8	97,0	97,2	97,6	97,8	98,0	98,2	98,4	98,4
	A	dB(A)	97,3	97,4	97,8	97,9	98,2	98,3	98,4	98,8	98,9
	E	dB(A)	89,3	89,4	90,2	90,3	90,4	90,8	91,2	91,8	92,0
	L	dB(A)	88,9	89,0	89,1	89,2	90,3	90,5	90,6	90,8	90,9
	N	dB(A)	90,0	90,4	90,9	91,0	91,1	91,4	91,4	92,1	92,2
	U	dB(A)	97,0	97,4	98,0	98,2	98,4	98,8	98,8	99,0	99,1
Without Static pressure											
Sound power level	°	dB(A)	97,5	97,6	97,6	97,9	98,1	98,2	98,4	98,4	98,4
	A	dB(A)	98,2	98,2	98,6	98,7	99,1	99,2	99,2	99,7	99,8
	E	dB(A)	89,3	89,4	90,2	90,3	90,4	90,8	91,2	91,8	92,0
	L	dB(A)	88,9	89,0	89,1	89,2	90,3	90,5	90,6	90,8	90,9
	N	dB(A)	90,0	90,4	90,9	91,0	91,1	91,4	91,4	92,1	92,2
	U	dB(A)	97,9	98,2	98,9	99,1	99,2	99,7	99,7	100,0	100,1

Size			3002	3202	3402	3602	3902	4202	4502	4802	5202
Fans: M											
Increased fan											
Type	°,A,E,L,N,U	type	axials								
Fan motor	°,A,U	type	Asynchronous								
	E,L,N	type	Asynchronous with phase cut								
Fan											
Number	°	no.	10	10	10	10	12	12	14	14	16
	A,L	no.	12	12	14	14	16	16	18	18	18
	E,U	no.	14	14	16	16	18	20	20	22	22
	N	no.	16	16	18	20	22	22	26	28	30
With static pressure											
Air flow rate	°	m^3/h	180000	180000	180000	180000	216000	216000	252000	252000	288000
	A	m^3/h	192000	192000	224000	224000	256000	256000	288000	288000	324000
	E	m^3/h	161000	161000	184000	184000	207000	230000	230000	253000	253000
	L	m^3/h	138000	138000	161000	161000	184000	184000	207000	207000	234000
	N	m^3/h	184000	184000	207000	230000	253000	253000	299000	322000	345000
	U	m^3/h	224000	224000	256000	256000	288000	320000	320000	352000	352000
High static pressure	°	Pa	-	-	-	-	-	-	-	-	-
	A,L	Pa	50	50	50	50	50	50	50	50	-
	E,N,U	Pa	50	50	50	50	50	50	50	50	50
Without Static pressure											
Air flow rate	°	m^3/h	180000	180000	180000	180000	216000	216000	252000	252000	288000
	A	m^3/h	216000	216000	252000	252000	288000	288000	324000	324000	324000
	E	m^3/h	161000	161000	184000	184000	207000	230000	230000	253000	253000
	L	m^3/h	138000	138000	161000	161000	184000	184000	207000	207000	234000
	N	m^3/h	184000	184000	207000	230000	253000	253000	299000	322000	345000
	U	m^3/h	252000	252000	288000	288000	324000	360000	360000	396000	396000
High static pressure	°,A,E,L,N,U	Pa	0	0	0	0	0	0	0	0	0
With static pressure											
Sound power level	°	dB(A)	99,4	99,5	99,6	99,8	100,7	100,8	101,2	101,3	101,7
	A	dB(A)	99,0	99,1	99,3	99,4	100,1	100,2	100,4	100,8	101,5
	E	dB(A)	92,2	92,3	92,8	93,0	93,2	93,5	93,6	93,7	93,8
	L	dB(A)	91,0	91,1	91,3	91,4	92,4	92,5	93,0	93,1	93,2
	N	dB(A)	92,3	92,4	92,8	93,1	93,3	93,4	94,3	94,4	94,8
	U	dB(A)	99,2	99,3	99,9	100,0	100,4	100,7	101,0	101,3	101,6
Without Static pressure											
Sound power level	°	dB(A)	99,4	99,5	99,6	99,8	100,7	100,8	101,2	101,3	101,7
	A	dB(A)	99,9	100,0	100,2	100,3	101,0	101,1	101,3	101,7	101,5
	E	dB(A)	92,2	92,3	92,8	93,0	93,2	93,5	93,6	93,7	93,8
	L	dB(A)	91,0	91,1	91,3	91,4	92,4	92,5	93,0	93,1	93,2
	N	dB(A)	92,3	92,4	92,8	93,1	93,3	93,4	94,3	94,4	94,8
	U	dB(A)	100,2	100,2	100,8	100,9	101,3	101,7	101,9	102,2	102,5

Size			5602	6002	6402	6503	6703	6903	7203	8403	9603
Fans: M											
Increased fan											
Type	°,A,E,L,N,U	type	axials								
Fan motor	°,A,U	type	Asynchronous								
	E,L,N	type	Asynchronous with phase cut								
Fan											
Number	°	no.	16	16	18	18	18	20	22	22	22
	A,L	no.	20	22	22	24	24	28	28	30	34
	E,U	no.	24	26	28	28	30	30	32	-	-
	N	no.	32	32	32	34	-	-	-	-	-

Size			5602	6002	6402	6503	6703	6903	7203	8403	9603
With static pressure											
Air flow rate	°	m^3/h	288000	288000	324000	324000	324000	360000	396000	396000	396000
	A	m^3/h	360000	396000	396000	384000	384000	448000	448000	480000	612000
	E	m^3/h	276000	299000	322000	322000	345000	345000	368000	-	-
	L	m^3/h	260000	286000	286000	276000	276000	322000	322000	345000	442000
	N	m^3/h	368000	368000	368000	391000	-	-	-	-	-
	U	m^3/h	384000	416000	448000	448000	480000	480000	512000	-	-
High static pressure	°	Pa	-	-	-	-	-	-	-	-	-
	A,L	Pa	-	-	-	50	50	50	50	50	-
	E,U	Pa	50	50	50	50	50	50	50	-	-
	N	Pa	50	50	50	50	-	-	-	-	-
Without Static pressure											
Air flow rate	°	m^3/h	288000	288000	324000	324000	324000	360000	396000	396000	396000
	A	m^3/h	360000	396000	396000	432000	432000	504000	504000	540000	612000
	E	m^3/h	276000	299000	322000	322000	345000	345000	368000	-	-
	L	m^3/h	260000	286000	286000	276000	276000	322000	322000	345000	442000
	N	m^3/h	368000	368000	368000	391000	-	-	-	-	-
	U	m^3/h	432000	468000	504000	504000	540000	540000	576000	-	-
High static pressure	°,A,L	Pa	0	0	0	0	0	0	0	0	0
	E,U	Pa	0	0	0	0	0	0	0	-	-
	N	Pa	0	0	0	0	-	-	-	-	-
With static pressure											
Sound power level	°	dB(A)	101,7	101,8	102,1	102,3	102,4	103,0	103,1	103,2	103,3
	A	dB(A)	101,7	101,9	102,0	102,0	102,1	102,3	102,4	103,3	104,4
	E	dB(A)	93,9	94,0	94,2	94,3	94,3	94,4	94,8	-	-
	L	dB(A)	93,7	93,9	94,0	94,2	94,2	94,3	94,3	94,4	95,0
	N	dB(A)	95,0	95,2	95,3	95,4	-	-	-	-	-
	U	dB(A)	102,0	102,1	102,2	102,2	102,3	102,4	102,4	-	-
Without Static pressure											
Sound power level	°	dB(A)	101,7	101,8	102,1	102,3	102,4	103,0	103,1	103,2	103,3
	A	dB(A)	101,7	101,9	102,0	102,9	103,0	103,2	103,3	104,1	104,4
	E	dB(A)	93,9	94,0	94,2	94,3	94,3	94,4	94,8	-	-
	L	dB(A)	93,7	93,9	94,0	94,2	94,2	94,3	94,3	94,4	95,0
	N	dB(A)	95,0	95,2	95,3	95,4	-	-	-	-	-
	U	dB(A)	102,9	103,0	103,2	103,2	103,3	103,4	103,4	-	-

Inverter

Size			1402	1602	1802	2002	2202	2352	2502	2652	2802
Fans: J											
Fan											
Type	°,A,E,L,N,U	type					axials				
Fan motor	°,A,E,L,N,U	type					Inverter				
Number	°	no.	6	6	6	8	8	8	8	8	8
	A,L	no.	8	8	8	8	10	10	10	12	12
	E,U	no.	8	8	10	10	10	12	12	14	14
	N	no.	10	10	12	12	12	14	14	16	16
Inverter fan											
Air flow rate	°	m^3/h	96000	96000	96000	128000	128000	128000	128000	144000	144000
	A	m^3/h	128000	128000	128000	128000	160000	160000	160000	192000	192000
	E	m^3/h	92000	92000	115000	115000	115000	138000	138000	161000	161000
	L	m^3/h	92000	92000	92000	92000	115000	115000	115000	138000	138000
	N	m^3/h	115000	115000	138000	138000	138000	161000	161000	184000	184000
	U	m^3/h	128000	128000	160000	160000	160000	192000	192000	224000	224000
High static pressure	°	Pa	120	120	120	120	120	120	120	75	75
	A,E,L,N,U	Pa	120	120	120	120	120	120	120	120	120
Sound data calculated in cooling mode (1)											
Sound power level	°	dB(A)	96,8	97,0	97,2	97,6	97,8	98,0	98,2	98,4	98,4
	A	dB(A)	97,3	97,4	97,8	97,9	98,2	98,3	98,4	98,8	98,9
	E	dB(A)	89,3	89,4	90,2	90,3	90,4	90,8	91,2	91,8	92,0
	L	dB(A)	88,9	89,0	89,1	89,2	90,3	90,5	90,6	90,8	90,9
	N	dB(A)	90,0	90,4	90,9	91,0	91,1	91,4	91,4	92,1	92,2
	U	dB(A)	97,0	97,4	98,0	98,2	98,4	98,8	98,8	99,0	99,1

(1) Sound power: calculated on the basis of measurements made in accordance with UNI EN ISO 9614-2, as required for Eurovent certification. Sound pressure measured in free field (in compliance with UNI EN ISO 3744).

Size			3002	3202	3402	3602	3902	4202	4502	4802	5202
Fans: J											
Fan											
Type	°,A,E,L,N,U	type					axials				
Fan motor	°,A,E,L,N,U	type					Inverter				

(1) Sound power: calculated on the basis of measurements made in accordance with UNI EN ISO 9614-2, as required for Eurovent certification. Sound pressure measured in free field (in compliance with UNI EN ISO 3744).

Size			3002	3202	3402	3602	3902	4202	4502	4802	5202
Number	°	no.	10	10	10	10	12	12	14	14	16
	A,L	no.	12	12	14	14	16	16	18	18	18
	E,U	no.	14	14	16	16	18	20	20	22	22
	N	no.	16	16	18	20	22	22	26	28	30
Inverter fan											
Air flow rate	°	m^3/h	180000	180000	180000	180000	216000	216000	252000	252000	288000
	A	m^3/h	192000	192000	224000	224000	256000	256000	288000	288000	324000
	E	m^3/h	161000	161000	184000	184000	207000	230000	230000	253000	253000
	L	m^3/h	138000	138000	161000	161000	184000	184000	207000	207000	234000
	N	m^3/h	184000	184000	207000	230000	253000	253000	299000	322000	345000
	U	m^3/h	224000	224000	256000	256000	288000	320000	320000	352000	352000
High static pressure	°	Pa	75	75	75	75	75	75	75	75	75
	A,L	Pa	120	120	120	120	120	120	120	120	75
	E,N,U	Pa	120	120	120	120	120	120	120	120	120
Sound data calculated in cooling mode (1)											
Sound power level	°	dB(A)	99,4	99,5	99,6	99,8	100,7	100,8	101,2	101,3	101,7
	A	dB(A)	99,0	99,1	99,3	99,4	100,1	100,2	100,4	100,8	101,5
	E	dB(A)	92,2	92,3	92,8	93,0	93,2	93,5	93,6	93,7	93,8
	L	dB(A)	91,0	91,1	91,3	91,4	92,4	92,5	93,0	93,1	93,2
	N	dB(A)	92,3	92,4	92,8	93,1	93,3	93,4	94,3	94,4	94,8
	U	dB(A)	99,2	99,3	99,9	100,0	100,4	100,7	101,0	101,3	101,6

(1) Sound power: calculated on the basis of measurements made in accordance with UNI EN ISO 9614-2, as required for Eurovent certification. Sound pressure measured in free field (in compliance with UNI EN ISO 3744).

Size			5602	6002	6402	6503	6703	6903	7203	8403	9603
Fans: J											
Fan											
Type	°,A,E,L,N,U	type					axials				
Fan motor	°,A,E,L,N,U	type					Inverter				
Number	°	no.	16	16	18	18	18	20	22	22	22
	A,L	no.	20	22	22	24	24	28	28	30	34
	E,U	no.	24	26	28	28	30	30	32	-	-
	N	no.	32	32	32	34	-	-	-	-	-
Inverter fan											
Air flow rate	°	m^3/h	288000	288000	324000	324000	324000	360000	396000	396000	396000
	A	m^3/h	360000	396000	396000	384000	384000	448000	448000	480000	612000
	E	m^3/h	276000	299000	322000	322000	345000	345000	368000	-	-
	L	m^3/h	260000	286000	286000	276000	276000	322000	322000	345000	442000
	N	m^3/h	368000	368000	368000	391000	-	-	-	-	-
	U	m^3/h	384000	416000	448000	448000	480000	480000	512000	-	-
High static pressure	°	Pa	75	75	75	75	75	75	75	75	75
	A,L	Pa	75	75	75	120	120	120	120	120	75
	E,U	Pa	120	120	120	120	120	120	120	-	-
	N	Pa	120	120	120	120	-	-	-	-	-
Sound data calculated in cooling mode (1)											
Sound power level	°	dB(A)	101,7	101,8	102,1	102,3	102,4	103,0	103,1	103,2	103,3
	A	dB(A)	101,7	101,9	102,0	102,0	102,1	102,3	102,4	103,3	104,4
	E	dB(A)	93,9	94,0	94,2	94,3	94,3	94,4	94,8	-	-
	L	dB(A)	93,7	93,9	94,0	94,2	94,2	94,3	94,3	94,4	95,0
	N	dB(A)	95,0	95,2	95,3	95,4	-	-	-	-	-
	U	dB(A)	102,0	102,1	102,2	102,2	102,3	102,4	102,4	-	-

(1) Sound power: calculated on the basis of measurements made in accordance with UNI EN ISO 9614-2, as required for Eurovent certification. Sound pressure measured in free field (in compliance with UNI EN ISO 3744).

DIMENSIONS

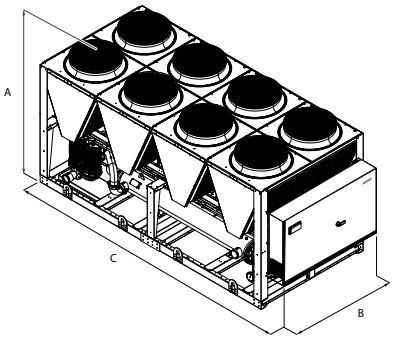

Size			1402	1602	1802	2002	2202	2352	2502	2652	2802	3002	3202	3402	3602	3902
Dimensions and weights																
A	°,A,E,L,N,U	mm	2450	2450	2450	2450	2450	2450	2450	2450	2450	2450	2450	2450	2450	2450
B	°,A,E,L,N,U	mm	2200	2200	2200	2200	2200	2200	2200	2200	2200	2200	2200	2200	2200	2200
C	°	mm	3970	3970	3970	5160	5160	5160	5160	5160	5160	6350	6350	6350	6350	7140
	A,L	mm	5160	5160	5160	5160	6350	6350	6350	7140	7140	7140	7140	8330	8330	9520
	E,U	mm	5160	5160	6350	6350	6350	7140	7140	8330	8330	8330	8330	9520	9520	10710
	N	mm	6350	6350	7140	7140	7140	8330	8330	9520	9520	9520	9520	10710	11900	13090

Size			4202	4502	4802	5202	5602	6002	6402	6503	6703	6903	7203	8403	9603
Dimensions and weights															
A	°,A,L	mm	2450	2450	2450	2450	2450	2450	2450	2450	2450	2450	2450	2450	2450
	E,U	mm	2450	2450	2450	2450	2450	2450	2450	2450	2450	2450	2450	-	-
	N	mm	2450	2450	2450	2450	2450	2450	2450	2450	-	-	-	-	-
B	°,A,L	mm	2200	2200	2200	2200	2200	2200	2200	2200	2200	2200	2200	2200	2200
	E,U	mm	2200	2200	2200	2200	2200	2200	2200	2200	2200	2200	2200	-	-
	N	mm	2200	2200	2200	2200	2200	2200	2200	2200	-	-	-	-	-
C	°	mm	7140	8330	8330	9520	9520	9520	10710	11110	11110	11900	13090	13090	13090
	A,L	mm	9520	10710	10710	10710	11900	13090	13090	14280	14280	16660	16660	17850	20230
	E,U	mm	11900	11900	13090	13090	14280	15470	16660	16660	17850	17850	19040	-	-
	N	mm	13090	15470	16660	17850	19040	19040	19040	20230	-	-	-	-	-

For transport reasons, the units with the depth of more than 13090 mm are shipped separately. For more information, please refer to the technical manual and / or installation.

Size			1402	1602	1802	2002	2202	2352	2502	2652	2802	3002	3202	3402	3602	3902
Integrated hydronic kit: 00																
Weights																
Empty weight	°	kg	3.660	3.702	3.831	4.670	5.040	5.053	5.077	5.273	5.396	5.922	5.977	6.410	6.901	7.477
	A,L	kg	4.213	4.249	4.373	4.699	5.472	5.488	5.691	6.228	6.424	6.477	6.577	7.656	8.129	8.647
	E,U	kg	4.373	4.394	4.840	5.431	5.785	6.333	6.356	6.805	6.896	6.914	6.953	8.149	8.660	9.431
	N	kg	4.791	4.812	5.373	5.965	6.318	6.741	6.764	7.254	7.346	7.416	7.508	8.882	9.759	10.383
Weight functioning	°	kg	3.753	3.790	3.962	4.801	5.171	5.202	5.226	5.548	5.671	6.244	6.299	6.732	7.214	7.790
	A,L	kg	4.306	4.337	4.505	4.848	5.621	5.637	5.966	6.503	6.747	6.799	6.871	8.173	8.645	9.152
	E,U	kg	4.505	4.543	4.989	5.753	6.107	6.655	6.679	7.118	7.209	7.279	7.352	8.718	9.177	9.936
	N	kg	4.923	4.962	5.522	6.287	6.641	7.063	7.086	7.567	7.659	7.729	7.802	9.399	10.276	10.888

Size			4202	4502	4802	5202	5602	6002	6402	6503	6703	6903	7203	8403	9603
Integrated hydronic kit: 00															
Weights															
Empty weight	°	kg	7.574	7.993	8.302	8.826	8.954	9.017	9.719	11.612	11.688	12.216	12.761	13.047	13.176
	A,L	kg	8.710	9.428	9.481	9.902	10.433	11.018	11.060	13.354	13.417	14.572	14.625	15.743	16.934
	E,U	kg	9.922	9.983	10.887	11.013	11.820	12.261	12.701	14.514	15.005	15.119	16.034	-	-
	N	kg	10.456	11.646	12.355	12.989	12.721	13.666	13.709	16.119	-	-	-	-	-
Weight functioning	°	kg	7.868	8.287	8.819	9.342	9.471	9.522	10.224	12.527	12.603	13.089	13.633	13.920	14.048
	A,L	kg	9.215	9.922	9.974	10.795	11.327	11.898	11.940	14.121	14.184	15.328	15.381	16.950	18.126
	E,U	kg	10.427	10.476	11.781	11.907	12.446	12.886	13.327	15.281	15.772	15.875	17.190	-	-
	N	kg	10.961	12.171	12.880	13.564	14.249	14.292	14.726	16.937	-	-	-	-	-

Aermec reserves the right to make any modifications deemed necessary.
All data is subject to change without notice. Aermec does not assume responsibility or liability for errors or omissions.

Aermec S.p.A.
Via Roma, 996 - 37040 Bevilacqua (VR) - Italia
Tel. 0442633111 - Telefax 044293577
www.aermec.com