RTG 060X-160X

Roof-Top for applications in medium crowed

Cooling capacity 57,7 ÷ 165,3 kW
Heating capacity 58,1 ÷ 164,6 kW

- **For medium crowding applications**
- **R32 refrigerant gas**
- **High efficiency also at partial loads**
- **High power modulation capacity**
- **Compressors and fans with Inverter**
- **Upgraded thermodynamic heat recovery**

DESCRIPTION

Independent Roof -top type air cooled air conditioner, for treatment, filtration and renewal of the air , based on the chosen configuration.
These are outdoor units using environmentally friendly R32 gas.
Being fitted to function with 50% external air (MB2, MB4, MBT and MBF versions), the units are designed for medium density applications like shopping malls, shops, offices and production areas. RTG 060X-160X
Based on the version and accessories selected, the units allow you to manage free-cooling mode and, in the MB4 and MBT versions, there is thermodynamic recovery (enhanced in the MBT configuration) of the energy contained in the expelled air, allowing for higher performance and efficiency.

VERSIONS

H Heat pump

FEATURES

Refrigerant HFC R32

Thanks to the R32 refrigerant (A2L slightly flammable), the environmental impact of the units is significantly reduced.
Combining a reduced refrigerant load with a low global warming potential (GWP), these units boast low equivalent CO_2 values.

Inverter compressor

All models use inverter-driven scroll compressors, which allow them to perfectly comply with the energy levels required by European regulations.
Inverter technology enables high seasonal energy efficiencies, reduced noise level at partial loads and high environmental comfort

Inverter fans

The air treatment cross-section ventilation, which represents the highest expense in terms of machine operating costs, is entrusted to the plug fans with EC brushless motors, efficiency class IE5, which enable high performance, easy flow rate adjustment, compactness, low noise, versatility and easy maintenance.
Two types of flow fans are available: the standard one and the enhanced one for a higher useful static pressure.

Axial fans

The axial fans on the source side are helical, electrically and mechanically protected by grilles, and are equipped with **brushless EC motors, efficiency class IE5.**
Electronic control of summer condensation temperature and winter evaporation temperature is standard.

Air filtration

A Coarse 55% corrugated filter according to ISO 16890 (G4 according to EN 779), with synthetic fibre filter media protected by wire mesh on both sides and a galvanised sheet steel frame is included as per standard.
The filters are placed on guides and are easily removable from the side.
Downstream it is possible to insert an additional filtration stage with ePM1 50% efficiency according to ISO 16890 (F7 according to EN 779) or ePM1 80% efficiency according to ISO 16890 (F9 according to EN 779).
As an alternative to mechanical filters, electrostatic filters can be fitted for even higher filtration efficiency and lower maintenance costs.
Air quality control systems are also available (VOC and CO2 probe).

Exchangers

The internal and external heat exchangers are made of copper pipes and aluminium louvers blocked by mechanical expansion of the pipes.
They are the high efficiency type with internally striped pipe and corrugated louvers.
To protect the louvers from corrosion, pre-painted aluminium louvers are available as an alternative.

Thermoregulation

Electronic controller able to manage the different functioning modes, ensuring maximum energy savings in all conditions of use by means of special software. Interfaces to connect to remote supervision and control systems available as options. The electrical panel complete with all devices is easily accessible.
The free-cooling/heating and defrosting logics are particularly sophisticated. As soon as the external conditions allow it, the unit is able to automatically activate the free-cooling or free-heating mode, which cools or heats the served room, while keeping the compressors off and introducing suitably treated external air. This mode significantly reduces both energy consumption and wear of the compressors. These functions are also used when the external air energy content is not enough to cool or heat the room.

Air flow management

There are different types of supply and exhaust (if present) air flow rate control.
With constant flow rate control, air flows are kept constant at the set value regardless of the heat load and varying pressure drops of the machine/plant system.
With variable flow rate control, the air flows vary depending on the heat load between the set nominal value and the minimum value of the unit.
With variable flow rate, in addition to the benefits in terms of environmental comfort, there are also economic benefits as the modulation of the air flow rate leads to a considerable reduction in the electricity consumption of the unit compared to a unit operating with a fixed flow rate.
A function can also be enabled that in Economy mode, when the temperature set-point is reached, allows ventilation to be switched off, with considerable economic advantages.

CONFIGURATIONS

MB1: Single ventilating cross-section for recovery air.
Recovery air only configuration where no fresh air is required.
The useful flow and recovery static pressure is provided by the flow ventilating cross-section.

MB2: Single ventilating cross-section for recovery and external air.
Recovery and external air configuration. The useful flow and recovery static pressure is provided by the flow ventilating cross-section.
If there are no extraction systems, the room will be in overpressure.
Possibility of performing freecooling/freeheating.

MB4: double ventilating cross-section (flow and expulsion) for recovery air, external air and exhaust air, thermodynamic recovery.
Recovery, external and exhaust air configuration. The flow ventilating cross-section provides the flow and recovery useful static pressure. The exhaust ventilating cross-section only controls the air flow rate to be expelled, with consequent reduction of the installed ventilation power.
Thermodynamic recovery is performed by conveying expelled air on the external heat exchangers.
Possibility of performing freecooling/freeheating.

MBT: double ventilating cross-section (flow and expulsion) for recovery air, external air and exhaust air, upgraded thermodynamic recovery.
Recovery, external and exhaust air configuration. The flow ventilating cross-section provides the flow and recovery useful static pressure.
The exhaust ventilating cross-section only controls the air flow rate to be expelled, with consequent reduction of the installed ventilation power.
Possibility of performing freecooling/freeheating.
The MBT configuration allows for the upgraded thermodynamic recovery on the exhaust air by fully exploiting the energy content still present in it.
The exhaust flow rate, controlled by the dedicated exhaust fan, is conveyed to the innovative finned pack recovery coil, integrated in the cooling circuit of the unit.
The coil, perfectly hit by the air flow, recovers the energy still present in the exhaust flow and transfer it to the cooling circuit, increasing the treatment coil performance without increasing the input power of the compressors.
In summer functioning, the coil makes it possible to increase the liquid subcooling, while in winter functioning, the coil takes on part of the evaporation by operating the cooling circuit at more advantageous temperatures.

MBF: single fan section for return air, outside air and exhaust air
Recovery, external and exhaust air configuration.
The flow ventilating cross-section provides the flow and recovery useful static pressure.
The flow rate of fresh and exhaust air is achieved through the use of two modulating dampers (fresh and exhaust air) and one gravimetric damper (exhaust air).
The presence of the recirculation damper allows for total free-cooling (100% external air).
This configuration makes it possible to exploit the overpressure in the room to expel stale air (maximum 50 Pa leakage in the duct) without having to use a dedicated fan.

MB1

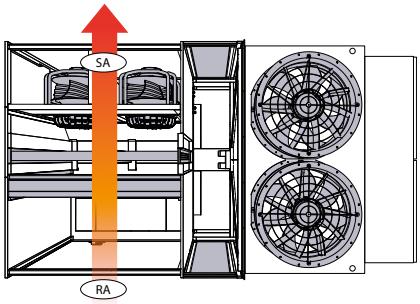

MB2

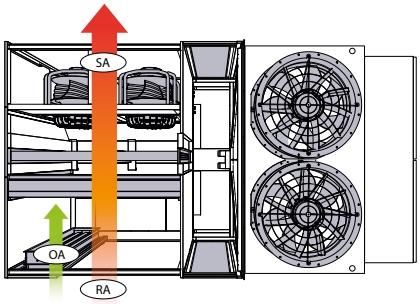

MB4

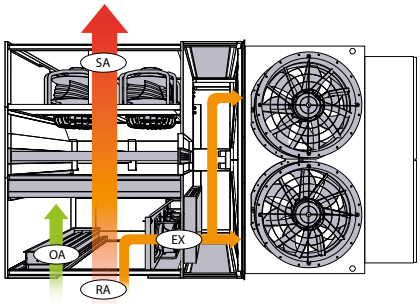

MBT

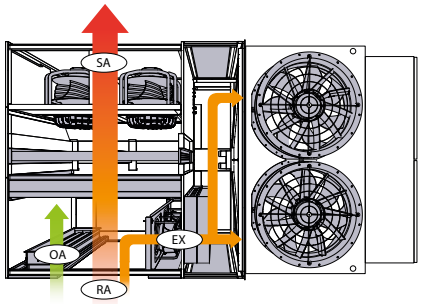

MBF

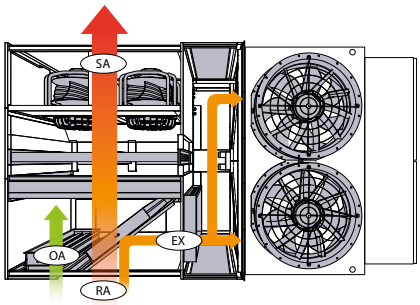

SA: Flow air
RA: Return air
OA: External air
EX: Air expelled

ACCESSORIES

Refer to the selection software for compatibility of accessories.

MB1: Single fan section - Recirculation
MB2: Single fan section - Recirculation + Renewal
MB4: Double fan section - Recirculation Renewal + Exhaust - Thermodynamic recovery
MBT: Double fan section - Recirculation + Renewal + Exhaust - Enhanced thermodynamic recovery
MBF: Single fan section - Recirculation + Renewal + Exhaust
MO: Horizontal air flow
MI: Lower air flow
MS: Upper air flow
RO: Horizontal air recovery
RI1: Lower air recovery for MB1 configuration
RI2: Lower air recovery for MB2 configuration
RI4: Lower air recovery for MB4/MBT configuration
RS1: Upper air recovery for MB1 configuration
RS2: Upper air recovery for MB2 configuration
RS4: Upper air recovery for MB4/MBT configuration
VSTD: Fans with standard static pressure
VPWR: Fans with increased static pressure
IAL: Internal coil with aluminium louvers
IPV: Internal coil with pre-painted aluminium louvers
EAL: External coil with aluminium louvers
EPV: External coil with pre-painted aluminium louvers
IALT: MBT internal coil with aluminium louvers
IPVT: MBT internal coil with pre-painted aluminium louvers
EALT: MBT external coil with aluminium louvers
EPVT: MBT external coil with pre-painted aluminium louvers
FCT: Thermal free-cooling
FCH: Enthalpy free-cooling
CMAN: Manual external damper control
SCM: Modulating external damper servocontrol
SCM-F: MBF modulating damper servocontrols
PCOST: Constant air flow rate
PVAR: Variable air flow rate
DML: Demand limit
PFS: Filter fouling control differential pressure switch
DEU: Summer dehumidification
DEUP: Summer dehumidification with post-heating
CUR: Provision for humidification control (digital contact and analogue output)
BPGC: Hot gas after-heating coil with aluminium louvers
BPGCPV: Hot gas after-heating coil with pre-painted aluminium louvers
BW2: Heating/Integration water coil with aluminium louvers

BW2PV: Heating/Integration water coil with pre-painted aluminium louvers
BW3: Water coil for recovery from refrigerated display cabinets with aluminium louvers
BW3PV: Water coil for recovery from refrigerated display cabinets with pre-painted aluminium louvers
V2V: Modulating 2-way valve + connecting pipes
V3V: Modulating 3-way valve + connecting pipes
BE: 2-stage electric heating coil (3 steps)
F7: F7 filters (ISO 16890 ePM1 55%)
F9: F9 filters (ISO 16890 ePM1 80%)
FE1: Electrostatic filters for MB1/MB2 configuration
FE4: Electrostatic filters for MB4/MBT/MBF configuration
SCO2: CO2 duct probe
SVOC: VOC duct probe
SCO2+SVOC: CO2 + VOC duct probe
ASCO2: Room CO2 probe
ASVOC: Room VOC probe
ASCO2+SAVOC: Room CO2 + VOC probe
STR: Recovery temperature probe
STA: Room temperature probe
STR+SUR: Recovery temperature and humidity probe
STA+SUA: Room temperature and humidity probe
PRT1: Remote panel up to 50m
PRT2: Remote panel up to 200m
AVG: Anti-vibration supports
MIP: Modbus TCP/IP communication protocol (standard)
MRTU: Modbus RTU communication module
BIP: Bacnet IP communication module
BMSTP: Bacnet MS/TP communication module
KON: KONNEX communication module
CAP: Hoods function
CFF: Fire/smoke contact

PERFORMANCE SPECIFICATIONS

Unit input power: at nominal air flow rate, nominal high static pressure and standard fans

MB1

Size		060	085	125	160
Configuration: MB1					
Cooling performances					
Cooling capacity	kW	57,70	77,70	121,30	157,70
Sensible cooling capacity	kW	46,30	64,70	88,10	114,20
Compressors absorbed power	kW	15,80	20,70	38,00	47,40
EER compressors		3,65	3,75	3,19	3,33
Unit input power	kW	20,1	26,9	45,5	59,3
Heating performances					
Heating capacity	kW	58,10	78,30	119,30	157,50
Compressors absorbed power	kW	12,80	17,30	30,00	40,30
Compressor COP		4,53	4,53	3,98	3,91
Unit input power	kW	16,5	22,0	37,4	51,1

Performance in cooling mode: Ambient air 27 °C d.b./19 °C w.b.; Outdoor air 35 °C/24 °C w.b.
Heating performances: Ambient air 20°C d.b./15°C w.b.; External air 7°C/6°C w.b.

MB2

Size		060	085	125	160
Configuration: MB2					
Cooling performances					
Cooling capacity	kW	60,40	81,40	127,00	164,30
Sensible cooling capacity	kW	49,00	68,70	92,10	119,20
Compressors absorbed power	kW	15,90	20,80	38,40	47,90
EER compressors		3,79	3,91	3,30	3,43
Unit input power	kW	20,2	27,0	46,0	59,8
Heating performances					
Heating capacity	kW	58,50	78,80	119,70	158,00
Compressors absorbed power	kW	11,70	15,90	27,60	37,00
Compressor COP		5,02	4,96	4,33	4,27
Unit input power	kW	15,3	20,6	35,1	47,8

Cooling performances: Ambient air 27°C d.b./19°C w.b.; External air 35°C/24°C w.b.; Functioning with 30% of external air.
Heating performances: Ambient air 20°C d.b./15°C w.b.; External air 7°C/6°C w.b.; Functioning with 30% of external air.

MB4

Size		060	085	125	160
Configuration: MB4					
Cooling performances					
Cooling capacity	kW	60,90	81,90	128,10	165,30
Sensible cooling capacity	kW	49,10	68,80	92,40	119,60
Compressors absorbed power	kW	15,50	20,40	37,40	46,60
EER compressors		3,92	4,02	3,42	3,55
Unit input power	kW	20,5	27,6	46,5	61,2
Heating performances					
Heating capacity	kW	61,20	82,10	124,60	164,60
Compressors absorbed power	kW	12,00	16,00	28,00	37,70
Compressor COP		5,12	5,12	4,45	4,37
Unit input power	kW	16,4	21,8	37,2	51,2

Cooling performances: Ambient air 27°C d.b./19°C w.b.; External air 35°C/24°C w.b.; Functioning with 30% of external and expelled air.
Heating performances: Ambient air 20°C d.b./15°C w.b.; External air 7°C/6°C w.b.; Functioning with 30% of external and expelled air.

MBF

Size		060	085	125	160
Configuration: MBF					
Cooling performances					
Cooling capacity	kW	60,40	81,40	127,00	164,30
Sensible cooling capacity	kW	49,00	68,70	92,10	119,20
Compressors absorbed power	kW	15,90	20,80	38,40	47,90
EER compressors		3,79	3,91	3,30	3,43
Unit input power	kW	20,2	27,0	46,0	59,8
Heating performances					
Heating capacity	kW	58,50	78,80	119,70	158,00
Compressors absorbed power	kW	11,70	15,90	27,60	37,00
Compressor COP		5,02	4,96	4,33	4,27
Unit input power	kW	15,3	20,6	35,1	47,8

Cooling performances: Ambient air 27°C d.b./19°C w.b.; External air 35°C/24°C w.b.; Functioning with 30% of external air.
Heating performances: Ambient air 20°C d.b./15°C w.b.; External air 7°C/6°C w.b.; Functioning with 30% of external air.

MBT

Size		060	085	125	160
Configuration: MBT					
Cooling performances					
Cooling capacity	kW	66,00	88,80	139,10	180,20
Sensible cooling capacity	kW	51,50	72,20	97,00	132,30
Compressors absorbed power	kW	15,50	20,50	37,50	47,00
EER compressors		4,25	4,34	3,71	3,84
Unit input power	kW	20,5	27,7	46,6	62,0
Heating performances					
Heating capacity	kW	65,90	88,50	134,40	178,00
Compressors absorbed power	kW	12,50	16,60	29,10	37,70
Compressor COP		5,29	5,32	4,62	4,73
Unit input power	kW	16,9	22,4	38,3	51,7

Cooling performances: Ambient air 27°C d.b./19°C w.b.; External air 35°C/24°C w.b.; Functioning with 30% of external and expelled air.
Heating performances: Ambient air 20°C d.b./15°C w.b.; External air 7°C/6°C w.b.; Functioning with 30% of external and expelled air.

ENERGY INDEX

Size		060	085	125	160
Energy index					
Pdesignc=Pratedc	kW	58,6	79,0	123,4	161,6
SEER	W/W	5,94	6,41	5,81	6,36
ηsc	%	234,60	253,50	229,20	251,50
Pratedh	kW	56,9	76,7	116,7	152,8
Pdesignh	kW	40,60	57,90	90,70	117,20
SCOP	W/W	3,74	3,83	3,59	3,83
ηsh	%	146,70	150,30	140,70	150,20

In MB1 configuration according to EN 14825:2022

INDICES FOR ACCESS TO INCENTIVES

Size		060	085	125	160
Configuration: MB1					
Indices for access to incentives					
Cooling capacity	kW	58,60	79,00	-	-
EER	W/W	3,10	3,14	-	-
Heating capacity	kW	56,90	76,70	-	-
COP	W/W	3,71	3,73	-	-

In MB1 configuration according to EN 14511-3:2022

GENERAL TECHNICAL DATA

Size		060	085	125	160
Power supply					
Power supply	V/Ph/Hz	400V~3 50Hz	400V~3 50Hz	400V~3 50Hz	400V~3 50Hz
Compressor					
Type	type	Scroll	Scroll	Scroll	Scroll
Number	no.	2	2	2	2
Circuits	no.	2	2	2	2
Refrigerant	type	R32	R32	R32	R32
Compressor regulation	Type	Inverter	Inverter	Inverter	Inverter
Sound data					
Sound power level	dB(A)	84,0	85,0	89,0	92,0

■ *Sound power in MB1 configuration at nominal operating conditions calculated on the basis of measurements in accordance with UNI EN ISO 9614-1/2*

FANS

External fans

Size		060	085	125	160
Configuration: MB1, MB2, MB4, MBF, MBT					
External fans					
Type	type	Axials EC	Axials EC	Axials EC	Axials EC
Number	no.	2	2	2	2

Internal flow fans

Size		060	085	125	160
Configuration: MB1, MB2, MB4, MBF, MBT					
Delivery					
Type	type	Plug fan EC			
Number	no.	1	2	2	3
Nominal air flow rate	m^3/h	12700	17500	23000	29000
Minimum air flow rate	m^3/h	9500	13000	17000	24000
Maximum air flow rate	m^3/h	14000	20500	25500	36000
Nominal high static pressure (EN14511)	Pa	200	200	250	350

Expulsion fan MB4

Size		060	085	125	160
Configuration: MB4					
Exhaust					
Type	type	Plug fan EC			
Number	no.	1	2	3	3
Nominal useful head	Pa	100	100	125	175

Expulsion fan MBT

Size		060	085	125	160
Configuration: MBT					
Exhaust					
Type	type	Plug fan EC			
Number	no.	1	2	3	3
Nominal useful head	Pa	100	100	125	175

DIMENSIONS

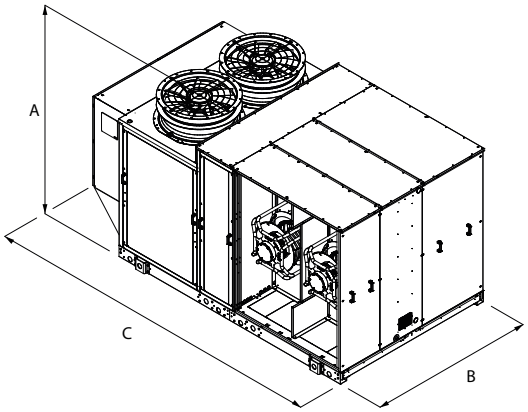

Size		060	085	125	160
Dimensions and weights					
A	mm	1570	1900	2165	2165
B	mm	2200	2200	2200	2200
C	mm	3305	3905	3905	5005
Empty weight	kg	1193	1518	1597	2030

■ *Empty weight: in MB1 configuration without accessories*

Aermec reserves the right to make any modifications deemed necessary. All data is subject to change without notice. Aermec does not assume responsibility or liability for errors or omissions.

Aermec S.p.A.
Via Roma, 996 - 37040 Bevilacqua (VR) - Italia
Tel. 0442633111 - Telefax 044293577
www.aermec.com