TBG 1230-4310

Air-water chiller

Cooling capacity 200 ÷ 1165 kW

- **High efficiency also at partial loads**
- **Microchannel coil**
- **Low peak current (only 6 Amps!)**
- **Evaporator with low refrigerant charge**

DESCRIPTION

Air-cooled chiller designed to meet air conditioning needs in residential / commercial complexes or industrial applications.
These are outdoor units with oil free centrifugal compressor, axial fans, micro-channel coils, and shell and tube heat exchangers.
The base, the structure and the panels are made of steel treated with polyester paint RAL 9003.

VERSIONS

A High efficiency
E Silenced high efficiency
N Silenced very high efficiency
U Very high efficiency

FEATURES

Operating field

Operation at full load up to 46 °C external air temperature depending on size and version. For further details refer to the selection software/technical documentation.

Units mono or dual-circuit

The units according to the size are mono or dual-circuit, to ensure maximum efficiency both at full load and at partial load.

Oil free centrifugal compressor

Two-stage oil-free centrifugal compressor with magnetic levitation and inverter.

Compressor features:

— Operates without oil as bearings are magnetic levitation type
— Continuous load modulation by varying rpm (from 30% to 100%)
— Low peak currents (only 6 Amps!)

Aluminium microchannel coils

The whole range uses microchannel condenser coils allowing reduction of refrigerant charge but keeping the same high efficiency.

Integrated hydronic kit

Integrated hydronic kit containing the main hydraulic components; available with various configurations, to obtain a solution that allows you to save money and to facilitate installation.

HFO R1234ze refrigerant gas

HFO R1234ze is a mixture featuring:
ODP = 0 e GWP (Global Warming Potential) = 1.37;
with thermodynamic properties that guarantee and sometimes improve efficiencies achieved with HFC refrigerants.

CONTROL PCO^5

Units include 1 control board for each circuit.

Microprocessor adjustment, with 7", touch screen keyboard, which allows to navigate intuitively among the various screens, allowing to modify the operating parameters and graphically view the progress of some variables in real time and the ad adjustment includes complete management of the alarms and their log.
Further features:

— Possibility to control two units in a Master-Slave configuration
— The presence of a programmable timer allows functioning time periods and a possible second set-point to be set.
— The temperature control takes place with the integral proportional logic, based on the water output temperature.

ACCESSORIES

AER485P1: RS-485 interface for supervising systems with MODBUS protocol. 1 accessory is provided for each unit control board.

AERBAC-ONE: Ethernet communication interface for Bacnet/IP and Modbus TCP/IP protocols, HTTPS protocol for web interface, encrypted communication protocols and access credential management in accordance with the latest standards. One accessory is provided for each unit control board.

AERBACP: Ethernet communication interface for Bacnet/IP and Modbus TCP/IP protocols. 1 accessory is provided for each unit control board.

AERNET: The device remotely controls, manages and remotely monitors a chiller/heat pump using a PC, smartphone or table via a Cloud connection. AERNET acts as Master while each connected unit is configured as Slave up to a maximum of 6 control cards. The connection is made via cable and/or USB key. Wi-Fi connectivity is not available. It is also possible to save a log file with all the data from the connected units to your terminal with a simple click for possible post-analysis. With the purchase of the Router, the Customer benefits from a 24-month free period during which he can use the Aernet Service at no additional cost. At the end of this initial period, the Service may be renewed by subscribing to a 1, 2 or 3 year subscription. For further details on costs and renewal methods, please contact our office or consult the technical documentation available on our website. www.aermec.com.

MULTICHILLER-EVO: Control, switch-on and switch-off system of the single chillers where multiple units are installed in parallel (max. no. 9), always ensuring constant flow rate to the evaporators.

AVX: Spring anti-vibration supports.

FACTORY FITTED ACCESSORIES

XLATB: This kit allows to extend the working range of the unit from 0 °C to -10 °C ambient temperature, thanks to an additional electric heater and a special insulating material for the heat exchanger.

GP_T: Anti-intrusion grid kit

ACCESSORIES COMPATIBILITY

Model	Ver	1230	1310	2230	2270	2310	3270	3280	3310	4270	4310
AER485P1	A,E,N,U	•	•	•		•		•	•		
AER485P1 x no. 2	A,E,N,U				•		•			•	•
AERBAC-ONE	A,E,N,U	•	•	•		•		•	•		
AERBAC-ONE x no. 2	A,E,N,U				•		•			•	•
AERBACP	A,E,N,U	•	•	•		•		•	•		
AERBACP x no. 2	A,E,N,U				•		•			•	•
AERNET	A,E,N,U	•	•	•	•	•	•	•	•	•	•
MULTICHILLER-EVO	A,E,N,U	•	•	•	•	•	•	•	•	•	•

Antivibration

Ver	1230	1310	2230	2270	2310	3270	3280	3310	4270	4310
Integrated hydronic kit: 00, DA, DB, DC, DD, DE, DF, DG, DH, DI, DJ, IA, IB, IC, ID, IE, IF, IG, IH, II, IJ, JA, JB, JC, JD, JE, JF, JG, JH, JI, JJ, KF, KG, KH, KI, KJ, PA, PB, PC, PD, PE, PF, PG, PH, PI, PJ, TF, TG, TH, TI, TJ										
A, E	AVX596	AVX. (1)	AVX597	AVX588	AVX592	AVX. (1)	AVX. (1)	AVX593	AVX. (1)	AVX. (1)
N, U	AVX. (1)	AVX500	AVX588	AVX592	AVX589	AVX. (1)	AVX593	AVX. (1)	AVX. (1)	AVX. (1)

(1) Contact us.

XLATB: Kit for low temperature

Ver	1230	1310	2230	2270	2310	3270	3280	3310	4270	4310
A, E, N, U	XLATB1	XLATB3	XLATB4	XLATB5	XLATB5	XLATB6	XLATB6	XLATB6	XLATB7	XLATB7

A grey background indicates the accessory must be assembled in the factory

Anti-intrusion grid

Ver	1230	1310	2230	2270	2310	3270	3280	3310	4270	4310
A, E	GP2T	GP3T	GP4T	GP5T	GP6T	GP7T	GP8T	GP9T	GP10T	GP11T
N, U	GP3T	GP4T	GP5T	GP6T	GP7T	GP8T	GP9T	GP10T	GP11T	GP11T

A grey background indicates the accessory must be assembled in the factory

CONFIGURATOR

Field	Description
1,2,3	**TBG**
4,5,6,7	**Size** 1230, 1310, 2230, 2270, 2310, 3270, 3280, 3310, 4270, 4310
8	**Model**
°	Cooling only
9	**Heat recovery**
°	Without heat recovery
10	**Version**
A	High efficiency
E	Silenced high efficiency
N	Silenced very high efficiency
U	Very high efficiency
11	**Coils**
I	Copper - aluminium
O	Coated aluminium microchannel
R	Copper pipes-copper fins
V	Copper - coated aluminium
°	Aluminium microchannel
12	**Fans**
K	Inverter plus
13	**Power supply**
°	400V ~ 3 50Hz with magnet circuit breakers
14,15	**Integrated hydronic kit**
00	Without hydronic kit
PA	Pump A
PB	Pump B
PC	Pump C
PD	Pump D
PE	Pump E
PF	Pump F
PG	Pump G
PH	Pump H
PI	Pump I
PJ	Pump J (1)
DA	Pump A + stand-by pump
DB	Pump B + stand-by pump
DC	Pump C + stand-by pump
DD	Pump D + stand-by pump
DE	Pump E + stand-by pump

Field	Description
DF	Pump F + stand-by pump
DG	Pump G + stand-by pump
DH	Pump H + stand-by pump
DI	Pump I + stand-by pump
DJ	Pump J + stand-by pump (1)
IA	Pump A equipped with inverter device to work at fixed speed
IB	Pump B equipped with inverter device to work at fixed speed
IC	Pump C equipped with inverter device to work at fixed speedr
ID	Pump D equipped with inverter device to work at fixed speed
IE	Pump E equipped with inverter device to work at fixed speed
IF	Pump F equipped with inverter device to work at fixed speed
IG	Pump G equipped with inverter device to work at fixed speed
IH	Pump H equipped with inverter device to work at fixed speed
II	Pump I equipped with inverter device to work at fixed speed
IJ	Pump J equipped with inverter device to work at fixed speed (1)
JA	Pump A+stand-by pump, both equipped with inverter to work at fixed speed
JB	Pump B+stand-by pump, both equipped with inverter to work at fixed speed
JC	Pump C+stand-by pump, both equipped with inverter to work at fixed speed
JD	Pump D+stand-by pump, both equipped with inverter to work at fixed speed
JE	Pump E+stand-by pump, both equipped with inverter to work at fixed speed
JF	Pump F+stand-by pump, both equipped with inverter to work at fixed speed
JG	Pump G+stand-by pump, both equipped with inverter to work at fixed speed
JH	Pump H+stand-by pump, both equipped with inverter to work at fixed speed
JI	Pump I+stand-by pump, both equipped with inverter to work at fixed speed
JJ	Pump J+stand-by pump, both equipped with inverter to work at fixed speed (1)
KF	Doble pump F with inverter device to work at fixed speed
KG	Doble pump G with inverter device to work at fixed speed
KH	Doble pump H with inverter device to work at fixed speed
KI	Doble pump I with inverter device to work at fixed speed
KJ	Doble pump J with inverter device to work at fixed speed (1)
TF	Double pump F
TG	Double pump G
TH	Double pump H
TI	Double pump I
TJ	Double pump J (1)
16	**Refrigerant gas**
G	R515B
°	R1234ze

(1) For all configurations including pump J please contact the factory.

PERFORMANCE SPECIFICATIONS

TBG - (A)

Size		1230	1310	2230	2270	2310	3270	3280	3310	4270	4310
Cooling performance 12 °C / 7 °C (1)											
Cooling capacity	kW	199,9	296,6	417,6	502,3	600,1	687,0	791,4	900,3	1033,3	1165,3
Input power	kW	57,7	86,1	121,5	146,6	174,8	199,1	231,3	262,2	305,7	345,1
Cooling total input current	A	95,50	140,70	200,90	241,20	291,40	326,60	386,90	437,10	502,30	577,60
EER	W/W	3,46	3,45	3,44	3,43	3,43	3,45	3,42	3,43	3,38	3,38
Water flow rate system side	l/h	34.397	51.028	71.817	86.370	103.190	118.120	136.075	154.785	177.653	200.332
Pressure drop system side	kPa	28	43	29	32	37	36	38	40	41	46

(1) Data EN 14511:2022; Heat exchanger water (services side) 12°C / 7°C; outside air 35°C

TBG - (E)

Size		1230	1310	2230	2270	2310	3270	3280	3310	4270	4310
Cooling performance 12 °C / 7 °C (1)											
Cooling capacity	kW	199,9	296,6	417,6	502,3	600,1	687,0	791,4	900,3	1033,3	1165,3
Input power	kW	57,7	86,1	121,5	146,6	174,8	199,1	231,3	262,2	305,7	345,1
Cooling total input current	A	95,50	140,70	200,90	241,20	291,40	326,60	386,90	437,10	502,30	577,60
EER	W/W	3,46	3,45	3,44	3,43	3,43	3,45	3,42	3,43	3,38	3,38
Water flow rate system side	l/h	34.397	51.028	71.817	86.370	103.190	118.120	136.075	154.785	177.653	200.332
Pressure drop system side	kPa	28	43	29	32	37	36	38	40	41	46

(1) Data EN 14511:2022; Heat exchanger water (services side) 12°C / 7°C; outside air 35°C

TBG - (U)

Size		1230	1310	2230	2270	2310	3270	3280	3310	4270	4310
Cooling performance 12 °C / 7 °C (1)											
Cooling capacity	kW	230,7	324,2	439,6	511,1	604,5	709,0	807,9	906,9	1011,3	1112,5
Input power	kW	65,3	91,2	124,4	143,9	170,1	201,3	230,6	257,3	290,2	323,2
Cooling total input current	A	105,70	150,90	206,20	236,40	276,60	331,90	392,10	427,30	477,60	537,60
EER	W/W	3,53	3,55	3,53	3,55	3,55	3,52	3,50	3,52	3,49	3,44
Water flow rate system side	l/h	39.688	55.753	75.597	87.882	103.946	121.900	138.909	155.919	173.873	191.260
Pressure drop system side	kPa	37	32	32	33	38	39	39	41	39	42

(1) Data EN 14511:2022; Heat exchanger water (services side) 12°C / 7°C; outside air 35°C

TBG - (N)

Size		1230	1310	2230	2270	2310	3270	3280	3310	4270	4310
Cooling performance 12 °C / 7 °C (1)											
Cooling capacity	kW	230,7	324,2	439,6	511,1	604,5	709,0	807,9	906,9	1011,3	1112,5
Input power	kW	65,3	91,2	124,4	143,9	170,1	201,3	230,6	257,3	290,2	323,2
Cooling total input current	A	105,70	150,90	206,20	236,40	276,60	331,90	392,10	427,30	477,60	537,60
EER	W/W	3,53	3,55	3,53	3,55	3,55	3,52	3,50	3,52	3,49	3,44
Water flow rate system side	l/h	39.688	55.753	75.597	87.882	103.946	121.900	138.909	155.919	173.873	191.260
Pressure drop system side	kPa	37	32	32	33	38	39	39	41	39	42

(1) Data EN 14511:2022; Heat exchanger water (services side) 12°C / 7°C; outside air 35°C

ENERGY INDICES (REG. 2016/2281 EU)

Size			1230	1310	2230	2270	2310	3270	3280	3310	4270	4310
SEER - 12/7 (EN14825: 2018)												
SEER	A,E	W/W	5,83	6,20	6,24	5,97	6,40	6,35	6,29	6,30	6,10	6,12
	N,U	W/W	6,03	6,50	6,49	6,20	6,57	6,47	6,46	6,42	6,33	6,20
Seasonal efficiency	A,E	%	230,10	244,99	246,75	235,76	252,81	251,08	248,69	248,85	240,82	241,84
	N,U	%	238,29	256,91	256,67	245,17	259,72	255,74	255,54	253,90	250,20	244,81
Water Regulation (1)	A,E,N,U	type	VW/VO	VW/VO	VW/VO	VW/VO	VW/VO	VW/VO	VW/VO	VW/VO	VW/VO	VW/VO
SEER - 23/18 (EN14825: 2018)												
SEER	A,E	W/W	-	7,51	-	-	7,93	-	7,80	7,81	-	7,59
	N,U	W/W	-	7,85	-	-	8,14	-	8,01	7,96	-	7,69
Seasonal efficiency	A,E	%	-	297,50	-	-	314,00	-	309,10	309,20	-	300,60
	N,U	%	-	311,10	-	-	322,50	-	317,50	315,40	-	304,40
Water Regulation (1)	A,E,N,U	type	-	VW/FO	-	-	VW/FO	-	VW/FO	VW/FO	-	VW/FO
SEPR - (EN 14825: 2018)												
SEPR	A,E	W/W	6,69	6,32	6,36	6,99	6,80	7,05	6,51	6,51	6,40	6,42
	N,U	W/W	6,80	6,56	6,57	7,16	6,98	7,19	6,69	6,64	6,63	6,50
Water Regulation (1)	A,E,N,U	type	VW/FO	VW/FO	VW/FO	VW/FO	VW/FO	VW/FO	VW/FO	VW/FO	VW/FO	VW/FO

(1) VW/VO - variable water flow rate/variable outlet temperature; FW/VO - fixed water flow rate/variable outlet temperature; VW/FO - variable water flow rate/fixed outlet temperature; FW/FO - fixed water flow rate/fixed outlet temperature.

ELECTRIC DATA

Size			1230	1310	2230	2270	2310	3270	3280	3310	4270	4310
Electric data												
Maximum current (FLA)	A,E	A	127,0	182,0	254,0	308,0	363,0	435,0	534,0	544,0	616,0	715,0
	N,U	A	138,0	192,0	264,0	319,0	373,0	446,0	544,0	554,0	627,0	715,0
Peak current (LRA)	A,E	A	27,0	38,0	154,0	208,0	219,0	185,0	240,0	400,0	260,0	571,0
	N,U	A	38,0	48,0	164,0	219,0	229,0	196,0	250,0	410,0	271,0	571,0

GENERAL TECHNICAL DATA

Refrigerant circuit

Size			1230	1310	2230	2270	2310	3270	3280	3310	4270	4310
Compressor												
Type	A,E,N,U	type	Centrifugal									
Compressor regulation	A,E,N,U	type	Inverter									
Number	A,E,N,U	no.	1	1	2	2	2	3	3	3	3	4
Circuits	A,E,N,U	no.	1	1	1	2	1	2	1	1	2	2
Refrigerant	A,E,N,U	type	R1234ze(E)									
Total refrigerant charge (1)	A,E	kg	71,00	110,00	142,00	177,00	188,00	254,00	265,00	307,00	318,00	328,00
	N,U	kg	82,00	121,00	153,00	188,00	198,00	265,00	276,00	286,00	328,00	328,00
Potential global heating (GWP)	A,E,N,U		1.37									
Equivalent CO_2	A,E	tCO_2eq	0,10	0,15	0,19	0,24	0,26	0,35	0,36	0,42	0,44	0,45
	N,U	tCO_2eq	0,11	0,17	0,21	0,26	0,27	0,36	0,38	0,39	0,45	0,45

(1) The load indicated in the table is an estimated and preliminary value. The final value of the refrigerant load is indicated on the unit's technical label. For further information contact the office.

System side heat exchanger

Size			1230	1310	2230	2270	2310	3270	3280	3310	4270	4310
System side heat exchanger												
Type	A,E,N,U	type	Shell and tube									
Number	A,E,N,U	no.	1	1	1	1	1	1	1	1	1	1

Fans

Size			1230	1310	2230	2270	2310	3270	3280	3310	4270	4310
Fan												
Type	A,E,N,U	type	axials									
Fan motor	A,E,N,U	type	Inverter									
Number	A,E	no.	4	6	8	10	12	14	16	18	20	22
	N,U	no.	6	8	10	12	14	16	18	20	22	22
Air flow rate	A,E	m^3/h	85510	128260	171020	213780	256530	299280	342040	384790	427550	470300
	N,U	m^3/h	128270	171020	213780	256530	299280	342040	384790	427550	470300	470300

Sound data

Size			1230	1310	2230	2270	2310	3270	3280	3310	4270	4310
Sound data calculated in cooling mode (1)												
Sound power level	A	dB(A)	85,2	88,4	88,2	90,1	91,4	91,3	92,9	93,1	93,1	94,2
	E	dB(A)	82,2	85,4	85,2	87,1	88,4	88,3	89,9	90,1	90,1	91,2
	N	dB(A)	83,3	85,9	85,8	87,5	88,7	88,6	90,1	90,3	90,3	91,2
	U	dB(A)	86,3	88,9	88,8	90,5	91,7	91,6	93,1	93,3	93,3	94,2
Sound pressure level (10 m)	A	dB(A)	53,3	56,5	55,8	57,6	58,8	58,5	60,0	60,1	60,0	61,0
	E	dB(A)	50,3	53,5	52,8	54,6	55,8	55,5	57,0	57,1	57,0	58,0
	N	dB(A)	51,1	53,5	53,3	54,9	55,9	55,7	57,1	57,2	57,1	58,0
	U	dB(A)	54,1	56,5	56,3	57,9	58,9	58,7	60,1	60,2	60,1	61,0

(1) Sound power calculated on the basis of measurements made in accordance with UNI EN ISO 9614-2, as required for Eurovent certification. Sound pressure (cold functioning) measured in free field, 10m away from the unit external surface (in compliance with UNI EN ISO 3744).

DIMENSIONS

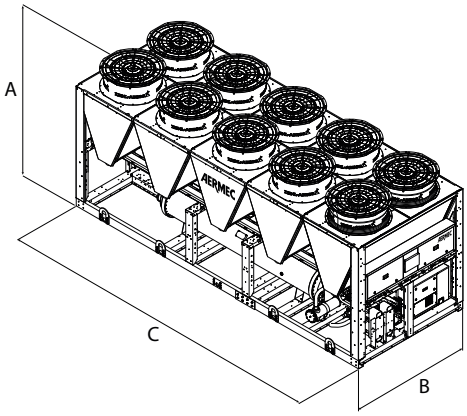

Size			1230	1310	2230	2270	2310	3270	3280	3310	4270	4310
Integrated hydronic kit: 00												
Dimensions and weights												
A	A,E,N,U	mm	2520	2520	2520	2520	2520	2520	2520	2520	2520	2520
B	A,E,N,U	mm	2200	2200	2200	2200	2200	2200	2200	2200	2200	2200
C	A,E	mm	2780	3970	5160	5950	7140	8330	9520	10710	11900	13090
	N,U	mm	3570	4760	5950	7140	8330	9520	10710	11900	13090	13090

Size			1230	1310	2230	2270	2310	3270	3280	3310	4270	4310
Integrated hydronic kit: DA, DB, DC, DD, DE, DF, DG, DH, DI, DJ, IA, IB, IC, ID, IE, IF, IG, IH, II, IJ, JA, JB, JC, JD, JE, JF, JG, JH, JI, JJ, KF, KG, KH, KI, KJ, PA, PB, PC, PD, PE, PF, PG, PH, PI, PJ, TF, TG, TH, TI, TJ												
Dimensions and weights												
A	A,E,N,U	mm	2520	2520	2520	2520	2520	2520	2520	2520	2520	2520
B	A,E,N,U	mm	2200	2200	2200	2200	2200	2200	2200	2200	2200	2200
C	A,E	mm	3970	5160	5160	5950	7140	8330	9520	10710	11900	13090
	N,U	mm	3570	4760	5950	7140	8330	9520	10710	11900	13090	13090

Size			1230	1310	2230	2270	2310	3270	3280	3310	4270	4310
Integrated hydronic kit: 00												
Weights												
Empty weight	A	kg	2.470	2.980	4.020	4.800	5.250	6.490	6.950	7.440	8.900	9.510
	E	kg	2.520	3.060	4.130	4.940	5.410	6.680	7.170	7.690	9.170	9.810
	N	kg	2.840	3.590	4.560	5.420	5.890	7.150	7.620	8.130	9.610	9.800
	U	kg	2.760	3.480	4.430	5.250	5.700	6.930	7.370	7.850	9.310	9.500
Weight functioning	A	kg	2.540	3.050	4.110	4.930	5.390	6.670	7.150	7.650	9.160	9.780
	E	kg	2.590	3.130	4.220	5.070	5.550	6.860	7.370	7.900	9.430	10.080
	N	kg	2.910	3.670	4.650	5.550	6.030	7.330	7.820	8.340	9.870	10.070
	U	kg	2.830	3.560	4.520	5.380	5.840	7.110	7.570	8.060	9.570	9.770

Aermec reserves the right to make any modifications deemed necessary.
All data is subject to change without notice. Aermec does not assume responsibility or liability for errors or omissions.

Aermec S.p.A.
Via Roma, 996 - 37040 Bevilacqua (VR) - Italia
Tel. 0442633111 - Telefax 044293577
www.aermec.com