TBG 1230-4310 F

Air-water chiller with free-cooling

Cooling capacity 238 ÷ 1110 kW

- **HFO R1234ze refrigerant gas**
- **High efficiency also at partial loads**
- **Microchannel coil**
- **Low peak current (only 6 Amps!)**
- **Evaporator with low refrigerant charge**

DESCRIPTION

Air-cooled chiller designed to meet air conditioning needs in residential / commercial complexes or industrial applications.
These are outdoor units with oil free centrifugal compressor, axial fans, micro-channel coils, and shell and tube heat exchangers.
The base, the structure and the panels are made of steel treated with polyester paint RAL 9003.

VERSIONS

A High efficiency
E Silenced high efficiency

FEATURES

Operating field

Operation at full load up to 44 °C external air temperature depending on size and version. For further details refer to the selection software/technical documentation.

Units mono or dual-circuit

The units according to the size are mono or dual-circuit, to ensure maximum efficiency both at full load and at partial load.

Oil free centrifugal compressor

Two-stage oil-free centrifugal compressor with magnetic levitation and inverter.
Compressor features:
— Operates without oil as bearings are magnetic levitation type
— Continuous load modulation by varying rpm (from 30% to 100%)
— Low peak currents (only 6 Amps!)

Aluminium microchannel coils

The whole range uses microchannel condenser coils allowing reduction of refrigerant charge but keeping the same high efficiency.

Free-cooling water coils

These units also have a water coil dedicated to free-cooling mode.
Free-cooling offers significant energy saving in applications that require cooling all year round.
As soon as the outside air temperature allows, a valve makes the water flow towards the free-cooling battery which is cooled directly by the air. The compressors are completely shut down, if possible, leading to considerable electrical savings.

■ *A "P" free-cooling plus model with the oversized water battery can be chosen for applications in which a higher free-cooling performance is required.*

Integrated hydronic kit

Integrated hydronic kit containing the main hydraulic components; available with various configurations, to obtain a solution that allows you to save money and to facilitate installation.

HFO R1234ze refrigerant gas

HFO R1234ze is a mixture featuring:
ODP = 0 e GWP (Global Warming Potential) = 1.37;
with thermodynamic properties that guarantee and sometimes improve efficiencies achieved with HFC refrigerants.

CONTROL PCO^5

Units include 1 control board for each circuit.
Microprocessor adjustment, with 7", touch screen keyboard, which allows to navigate intuitively among the various screens, allowing to modify the operating parameters and graphically view the progress of some variables in real time and the ad adjustment includes complete management of the alarms and their log.
Further features:
— Possibility to control two units in a Master-Slave configuration
— The presence of a programmable timer allows functioning time periods and a possible second set-point to be set.
— The temperature control takes place with the integral proportional logic, based on the water output temperature.

CONFIGURATOR

Field		Description
1,2,3		**TBG**
4,5,6,7		**Size** 1230, 1310, 2230, 2270, 2310, 3270, 3280, 3310, 4270, 4310
8		**Model**
	F	Free-cooling
	P	Free-cooling plus (1)
9		**Heat recovery**
	°	Without heat recovery
10		**Version**
	A	High efficiency
	E	Silenced high efficiency
11		**Coils / free-cooling coils**
	O	Painted alluminium microchannel / Copper painted aluminium
	R	Copper-copper/Copper-copper
	V	Copper-painted alumimium / Copper-painted alumimium
	°	Alluminium microchannel / Copper - aluminium
12		**Fans**
	K	Inverter plus
13		**Power supply**
	°	400V ~ 3 50Hz with magnet circuit breakers
14,15		**Integrated hydronic kit**
	00	Without hydronic kit
		Kit with n° 1 pump
	PA	Pump A
	PB	Pump B
	PC	Pump C
	PD	Pump D
	PE	Pump E
	PF	Pump F
	PG	Pump G
	PH	Pump H
	PI	Pump I
	PJ	Pump J (2)
		Pump n° 1 pump + stand-by pump
	DA	Pump A + stand-by pump
	DB	Pump B + stand-by pump
	DC	Pump C + stand-by pump
	DD	Pump D + stand-by pump
	DE	Pump E + stand-by pump
	DF	Pump F + stand-by pump
	DG	Pump G + stand-by pump
	DH	Pump H + stand-by pump

Field		Description
	DI	Pump I + stand-by pump
	DJ	Pump J + stand-by pump (2)
		Kit with inverter pump to fixed speed
	IA	Pump A equipped with inverter device to work at fixed speed
	IB	Pump B equipped with inverter device to work at fixed speed
	IC	Pump C equipped with inverter device to work at fixed speedr
	ID	Pump D equipped with inverter device to work at fixed speed
	IE	Pump E equipped with inverter device to work at fixed speed
	IF	Pump F equipped with inverter device to work at fixed speed
	IG	Pump G equipped with inverter device to work at fixed speed
	IH	Pump H equipped with inverter device to work at fixed speed
	II	Pump I equipped with inverter device to work at fixed speed
	IJ	Pump J equipped with inverter device to work at fixed speed (2)
		Kit with n°1 pump + stand-by pump both equipped wih inverter device to work at fixed speed
	JA	Pump A+stand-by pump, both equipped with inverter to work at fixed speed
	JB	Pump B+stand-by pump, both equipped with inverter to work at fixed speed
	JC	Pump C+stand-by pump, both equipped with inverter to work at fixed speed
	JD	Pump D+stand-by pump, both equipped with inverter to work at fixed speed
	JE	Pump E+stand-by pump, both equipped with inverter to work at fixed speed
	JF	Pump F+stand-by pump, both equipped with inverter to work at fixed speed
	JG	Pump G+stand-by pump, both equipped with inverter to work at fixed speed
	JH	Pump H+stand-by pump, both equipped with inverter to work at fixed speed
	JI	Pump I+stand-by pump, both equipped with inverter to work at fixed speed
	JJ	Pump J+stand-by pump, both equipped with inverter to work at fixed speed (2)
		Kit with double pump both equipped with inverter device to work at fixed speed
	KF	Doble pump F with inverter device to work at fixed speed
	KG	Doble pump G with inverter device to work at fixed speed
	KH	Doble pump H with inverter device to work at fixed speed
	KI	Doble pump I with inverter device to work at fixed speed
	KJ	Doble pump J with inverter device to work at fixed speed (2)
		Kit with double pumps
	TF	Double pump F
	TG	Double pump G
	TH	Double pump H
	TI	Double pump I
	TJ	Double pump J (2)
16		**Refrigerant gas**
	G	R515B
	°	R1234ze

(1) The Free-Cooling Plus "P" models are only compatible with"°" ed "0"
(2) For all configurations including pump J please contact the factory.

ACCESSORIES

AER485P1: RS-485 interface for supervising systems with MODBUS protocol. 1 accessory is provided for each unit control board.
AERBAC-ONE: Ethernet communication interface for Bacnet/IP and Modbus TCP/IP protocols, HTTPS protocol for web interface, encrypted communication protocols and access credential management in accordance with the latest standards. One accessory is provided for each unit control board.
AERBACP: Ethernet communication interface for Bacnet/IP and Modbus TCP/IP protocols. 1 accessory is provided for each unit control board.
AERNET: The device remotely controls, manages and remotely monitors a chiller/heat pump using a PC, smartphone or table via a Cloud connection. AERNET acts as Master while each connected unit is configured as Slave up to a maximum of 6 control cards. The connection is made via cable and/or USB key. Wi-Fi connectivity is not available. It is also possible to save a log file with all the data from the connected units to your terminal with a simple click for possible post-analysis. With the purchase of the Router, the Customer benefits from a 24-month free period during which he can use the Aernet Service at no additional cost. At the end of this initial period, the Service may be renewed by subscribing to a 1, 2 or 3 year subscription. For further details on costs and renewal methods, please contact our office or consult the technical documentation available on our website. www.aermec.com.
AVX: Spring anti-vibration supports.

FACTORY FITTED ACCESSORIES

GP_T: Anti-intrusion grid kit

ACCESSORIES COMPATIBILITY

Model	Ver	1230	1310	2230	2270	2310	3270	3280	3310	4270	4310
AER485P1	A,E	•	•	•		•		•	•		
AER485P1 x no. 2	A,E				•		•			•	•
AERBAC-ONE	A,E	•	•	•		•		•	•		
AERBAC-ONE x no. 2	A,E				•		•			•	•
AERBACP	A,E	•	•	•		•		•	•		
AERBACP x no. 2	A,E				•		•			•	•
AERNET	A,E	•	•	•	•	•	•	•	•	•	•

Antivibration

Ver	1230	1310	2230	2270	2310	3270	3280	3310	4270	4310
Integrated hydronic kit: 00, DA, DB, DC, DD, DE, DF, DG, DH, DI, DJ, IA, IB, IC, ID, IE, IF, IG, IH, II, IJ, JA, JB, JC, JD, JE, JF, JG, JH, JI, JJ, KF, KG, KH, KI, KJ, PA, PB, PC, PD, PE, PF, PG, PH, PI, PJ, TF, TG, TH, TI, TJ										
A, E	AVX591	AVX. (1)	AVX1187	AVX. (1)	AVX. (1)	AVX. (1)	AVX. (1)	AVX. (1)	AVX. (1)	AVX. (1)

(1) Contact us.

Anti-intrusion grid

Ver	1230	1310	2230	2270	2310	3270	3280	3310	4270	4310
A, E	GP3T	GP4T	GP5T	GP6T	GP7T	GP8T	GP9T	GP10T	GP11T	GP11T

A grey background indicates the accessory must be assembled in the factory

PERFORMANCE SPECIFICATIONS

Size			1230	1310	2230	2270	2310	3270	3280	3310	4270	4310
Model: F												
Cooling performance chiller operation (1)												
Cooling capacity	A,E	kW	237,9	328,6	453,2	526,8	623,2	730,8	798,8	907,5	1019,7	1110,3
Input power	A,E	kW	68,6	95,3	130,6	153,1	181,1	211,4	231,7	260,0	294,0	328,1
Cooling total input current	A,E	A	112,50	158,30	214,20	255,00	300,80	346,70	387,50	433,30	489,20	549,20
EER	A,E	W/W	3,47	3,45	3,47	3,44	3,44	3,46	3,45	3,49	3,47	3,38
Water flow rate system side	A,E	l/h	40.879	56.452	77.865	90.518	107.064	125.557	137.237	155.924	175.196	190.769
Pressure drop system side	A,E	kPa	48	51	45	54	50	55	54	63	46	56
Cooling performances with free-cooling (2)												
Cooling capacity	A,E	kW	212,1	288,7	381,1	449,7	528,5	612,2	678,4	762,7	848,0	882,3
Input power	A,E	kW	9,9	13,2	16,5	19,8	23,1	26,4	29,7	32,9	36,2	36,2
Free cooling total input current	A,E	A	16,2	21,9	27,0	32,9	38,3	43,2	49,6	54,9	60,3	60,7
EER	A,E	W/W	21,46	21,91	23,13	22,75	22,92	23,23	22,88	23,15	23,40	24,35
Water flow rate system side	A,E	l/h	40.879	56.452	77.865	90.518	107.064	125.557	137.237	155.924	175.196	190.769
Pressure drop system side	A,E	kPa	81	93	86	97	87	97	98	113	88	105

(1) System side water heat exchanger 12 °C/7 °C; External air 35 °C; Chiller operation 100%; Free-cooling 0%
(2) Acqua scambiatore lato utenza 12 °C / * °C ; Aria esterna 2 °C

Size			1230	1310	2230	2270	2310	3270	3280	3310	4270	4310
Model: P												
Cooling performance chiller operation (1)												
Cooling capacity	A,E	kW	237,9	328,6	453,2	526,8	623,1	730,8	798,8	907,5	1019,7	1110,3
Input power	A,E	kW	69,6	96,9	132,6	155,8	184,3	214,7	235,6	265,7	296,9	337,7
Cooling total input current	A,E	A	112,50	158,30	214,20	255,00	300,80	346,70	387,50	433,30	489,20	549,20
EER	A,E	W/W	3,42	3,39	3,42	3,38	3,38	3,40	3,39	3,42	3,43	3,29
Water flow rate system side	A,E	l/h	40.879	56.452	77.865	90.518	107.064	125.557	137.237	155.924	175.196	190.769
Pressure drop system side	A,E	kPa	48	51	45	54	50	55	54	63	46	56
Cooling performances with free-cooling (2)												
Cooling capacity	A,E	kW	227,5	309,6	408,4	482,0	566,5	656,1	726,6	817,7	908,8	944,5
Input power	A,E	kW	10,1	13,4	16,8	20,2	23,5	26,9	30,3	33,6	37,0	37,0
Free cooling total input current	A,E	A	16,3	22,0	27,2	33,0	38,4	43,4	49,8	54,8	60,9	60,1
EER	A,E	W/W	22,55	23,03	24,30	23,90	24,07	24,39	24,01	24,33	24,58	25,54
Water flow rate system side	A,E	l/h	40.879	56.452	77.865	90.518	107.064	125.557	137.237	155.924	175.196	190.769
Pressure drop system side	A,E	kPa	78	91	83	94	84	94	95	110	84	101

(1) System side water heat exchanger 12 °C/7 °C; External air 35 °C; Chiller operation 100%; Free-cooling 0%
(2) Acqua scambiatore lato utenza 12 °C / * °C ; Aria esterna 2 °C

ENERGY INDICES (REG. 2016/2281 EU)

Size			1230	1310	2230	2270	2310	3270	3280	3310	4270	4310
Model: F												
SEER - 12/7 (EN14825: 2018)												
SEER	A,E	W/W	5,84	6,26	6,17	5,82	6,24	6,11	6,11	6,11	6,06	5,87
Seasonal efficiency	A,E	%	230,70	247,20	243,70	229,60	246,50	241,40	241,50	241,30	239,50	231,70
Water Regulation (1)	A,E	type	VW/VO	VW/VO	VW/VO	VW/VO	VW/VO	VW/VO	VW/VO	VW/VO	VW/VO	VW/VO
SEER - 23/18 (EN14825: 2018)												
SEER	A,E	W/W	-	7,54	-	-	7,72	-	7,57	7,56	-	7,27
Seasonal efficiency	A,E	%	-	298,60	-	-	305,70	-	299,60	299,20	-	287,80
Water Regulation (1)	A,E	type	-	VW/FO	-	-	VW/FO	-	VW/FO	VW/FO	-	VW/FO
SEPR - (EN 14825: 2018)												
SEPR	A,E	W/W	10,34	10,38	10,12	9,09	10,01	10,04	10,34	10,35	10,22	9,86
Water Regulation (1)	A,E	type	VW/FO	VW/FO	VW/FO	VW/FO	VW/FO	VW/FO	VW/FO	VW/FO	VW/FO	VW/FO

(1) VW/VO - variable water flow rate/variable outlet temperature; FW/VO - fixed water flow rate/variable outlet temperature; VW/FO - variable water flow rate/fixed outlet temperature; FW/FO - fixed water flow rate/fixed outlet temperature.

Size			1230	1310	2230	2270	2310	3270	3280	3310	4270	4310
Model: P												
SEER - 12/7 (EN14825: 2018)												
SEER	A,E	W/W	5,78	6,14	6,14	5,78	6,17	6,09	6,07	6,09	6,10	5,84
Seasonal efficiency	A,E	%	228,30	242,40	242,40	228,00	243,90	240,70	239,60	240,50	241,10	230,70
Water Regulation (1)	A,E	type	VW/VO	VW/VO	VW/VO	VW/VO	VW/VO	VW/VO	VW/VO	VW/VO	VW/VO	VW/VO
SEER - 23/18 (EN14825: 2018)												
SEER	A,E	W/W	-	7,40	-	-	7,64	-	7,51	7,53	-	7,24
Seasonal efficiency	A,E	%	-	293,00	-	-	302,60	-	297,30	298,20	-	286,60
Water Regulation (1)	A,E	type	-	VW/FO	-	-	VW/FO	-	VW/FO	VW/FO	-	VW/FO
SEPR - (EN 14825: 2018)												
SEPR	A,E	W/W	10,26	10,20	10,10	9,26	10,14	10,20	10,30	10,35	10,31	9,86
Water Regulation (1)	A,E	type	VW/FO	VW/FO	VW/FO	VW/FO	VW/FO	VW/FO	VW/FO	VW/FO	VW/FO	VW/FO

(1) VW/VO - variable water flow rate/variable outlet temperature; FW/VO - fixed water flow rate/variable outlet temperature; VW/FO - variable water flow rate/fixed outlet temperature; FW/FO - fixed water flow rate/fixed outlet temperature.

ELECTRIC DATA

Size			1230	1310	2230	2270	2310	3270	3280	3310	4270	4310
Electric data												
Maximum current (FLA)	A,E	A	138,0	192,0	264,0	319,0	373,0	446,0	544,0	554,0	627,0	715,0
Peak current (LRA)	A,E	A	38,0	48,0	164,0	219,0	229,0	346,0	400,0	410,0	527,0	571,0

GENERAL TECHNICAL DATA

Refrigerant circuit

Size			1230	1310	2230	2270	2310	3270	3280	3310	4270	4310
Compressor												
Type	A,E	type	Centrifugal									
Compressor regulation	A,E	type	Inverter									
Number	A,E	no.	1	1	2	2	2	3	3	3	4	4
Circuits	A,E	no.	1	1	1	2	1	2	1	1	2	2
Refrigerant	A,E	type	R1234ze(E)									
Total refrigerant charge (1)	A,E	kg	81,50	120,10	152,30	187,10	197,80	264,50	275,20	285,90	327,90	327,90
Potential global heating (GWP)	A,E		1,37									
Equivalent CO_2	A,E	tCO_2eq	0,11	0,16	0,21	0,26	0,27	0,36	0,38	0,39	0,45	0,45

(1) The load indicated in the table is an estimated and preliminary value. The final value of the refrigerant load is indicated on the unit's technical label. For further information contact the office.

System side heat exchanger

Size			1230	1310	2230	2270	2310	3270	3280	3310	4270	4310
System side heat exchanger												
Type	A,E	type	Shell and tube									
Number	A,E	no.	1	1	1	1	1	1	1	1	1	1
Hydraulic connections												
Connections (in/out)	A,E	Type	Grooved joints									
Size (in)	A,E	Ø	3"	3"	4"	4"	5"	5"	5"	5"	6"	6"
Size (out)	A,E	Ø	3"	3"	4"	4"	5"	5"	5"	5"	6"	6"

Fans

Size			1230	1310	2230	2270	2310	3270	3280	3310	4270	4310
Model: F												
Inverter fan												
Type	A,E	type	Axial									
Fan motor	A,E	type	Inverter									
Number	A,E	no.	6	8	10	12	14	16	18	20	22	22
Air flow rate	A,E	m^3/h	105810	141080	176340	211610	246880	282150	317410	352680	387950	387950

Size			1230	1310	2230	2270	2310	3270	3280	3310	4270	4310
Model: P												
Inverter fan												
Type	A,E	type	Axial									
Fan motor	A,E	type	Inverter									
Number	A,E	no.	6	8	10	12	14	16	18	20	22	22
Air flow rate	A,E	m^3/h	100240	133300	167400	200570	233890	267470	300740	334130	367140	367930

Sound data

Size			1230	1310	2230	2270	2310	3270	3280	3310	4270	4310
Sound data calculated in cooling mode (1)												
Sound power level	A	dB(A)	86,3	88,9	88,8	90,5	91,7	91,6	93,1	93,3	93,3	94,2
	E	dB(A)	83,3	85,9	85,8	87,5	88,7	88,6	90,1	90,3	90,3	91,2
Sound pressure level (10 m)	A	dB(A)	54,1	56,5	56,3	57,9	58,9	58,7	60,1	60,2	60,1	61,0
	E	dB(A)	51,1	53,5	53,3	54,9	55,9	55,7	57,1	57,2	57,1	58,0

(1) Sound power calculated on the basis of measurements made in accordance with UNI EN ISO 9614-2, as required for Eurovent certification. Sound pressure (cold functioning) measured in free field, 10m away from the unit external surface (in compliance with UNI EN ISO 3744).

DIMENSIONS

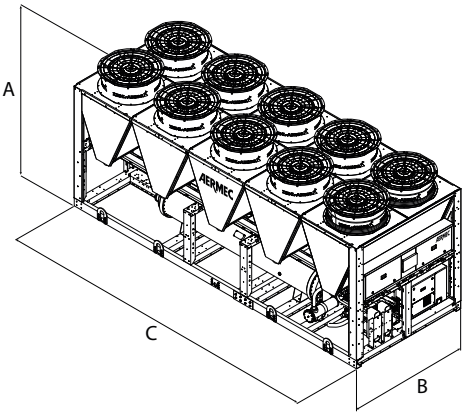

Size			1230	1310	2230	2270	2310	3270	3280	3310	4270	4310
Integrated hydronic kit: 00, DA, DB, DC, DD, DE, DF, DG, DH, DI, DJ, IA, IB, IC, ID, IE, IF, IG, IH, II, IJ, JA, JB, JC, JD, JE, JF, JG, JH, JI, JJ, KF, KG, KH, KI, KJ, PA, PB, PC, PD, PE, PF, PG, PH, PI, PJ, TF, TG, TH, TI, TJ												
Dimensions and weights												
A	A,E	mm	2520	2520	2520	2520	2520	2520	2520	2520	2520	2520
B	A,E	mm	2200	2200	2200	2200	2200	2200	2200	2200	2200	2200
C	A,E	mm	3570	4760	5950	7140	8330	9520	10710	11900	13090	13090

Model F

Size			1230	1310	2230	2270	2310	3270	3280	3310	4270	4310
Integrated hydronic kit: 00												
Weights												
Empty weight	A	kg	3.250	4.110	5.220	6.180	6.770	8.130	8.720	9.400	10.960	11.220
	E	kg	3.330	4.220	5.360	6.350	6.960	8.350	8.960	9.670	11.270	11.520
Weight functioning	A	kg	3.510	4.450	5.630	6.700	7.360	8.820	9.500	10.250	11.920	12.190
	E	kg	3.590	4.560	5.770	6.870	7.550	9.040	9.740	10.520	12.230	12.490

Model P

Size			1230	1310	2230	2270	2310	3270	3280	3310	4270	4310
Integrated hydronic kit: 00												
Weights												
Empty weight	A	kg	3.340	4.240	5.380	6.370	6.990	8.380	9.000	9.710	11.310	11.570
	E	kg	3.430	4.350	5.520	6.540	7.180	8.600	9.250	9.990	11.610	11.870
Weight functioning	A	kg	3.640	4.640	5.860	6.970	7.680	9.180	9.900	10.700	12.420	12.690
	E	kg	3.730	4.750	6.000	7.140	7.870	9.400	10.150	10.980	12.720	12.990

Aermec reserves the right to make any modifications deemed necessary. All data is subject to change without notice. Aermec does not assume responsibility or liability for errors or omissions.

Aermec S.p.A.
Via Roma, 996 - 37040 Bevilacqua (VR) - Italia
Tel. 0442633111 - Telefax 044293577
www.aermec.com